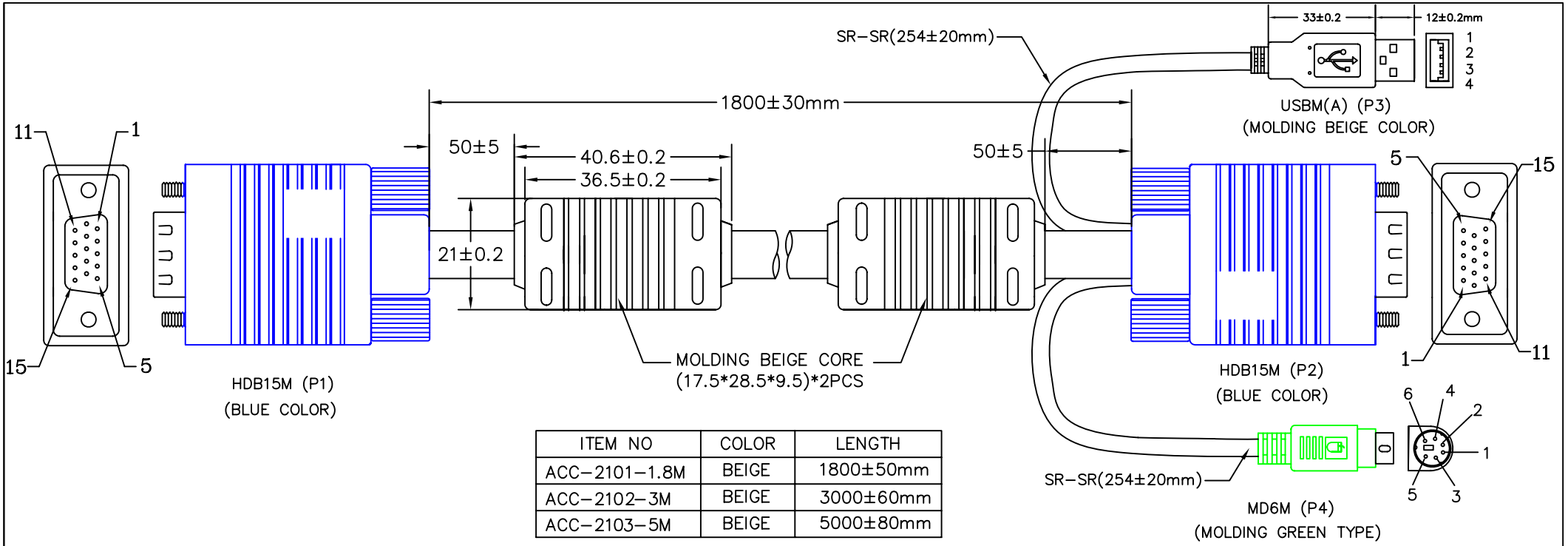

ITEM NO	COLOR	LENGTH
ACC-2101-1.8M	BEIGE	1800±50mm
ACC-2102-3M	BEIGE	3000±60mm
ACC-2103-5M	BEIGE	5000±80mm

NOTE:

1. CABLE: (A)28AWG(7/0.12TC),UL2919,AL+D+B(85% AL/MY)-FOIL,(28AWG*1C+S)*3COAX+28AWG*9C,OD=8.5±0.2mm.BEIGE WITH EMBOSS,PVC JACKET[Conductor: TS].
   (B)UL2464,AL-FOIL,28AWG*4C+D,OD=4.0mm,BEIGE COLOR,PVC JACKET
2. LENGHT: 1880mm.
3. CONNECTORS: HDB15P*2PCS(BLUE INSULATION)(FULL PIN G/F)(SHELL NICKEL).
   MD6M*1PCS(GREEN INSULATION)(PING G/F)(SHELL NICKEL),
   USBAM*1PCS(WHITE COLOR)(PIN G/F)(SHELL NICKEL).
4. SCREW : INCH SCREW*4,(BNC SCREW)(NICKEL),
5. CONTACTS:

P1	1	2	3	4	5	6	7	8	9	10	11	12	13	14	15	64
P2	1	2	3			5+10	7+8	7+8				12	13	14	15	64
P3				2	3	4				1						64
P4	R C	B C	G C	Pair		3 R G	G G	B G	1		5					64 SHELL

6. MOLD: ASS'Y IBM TYPE.
7. Test machine test condition.
   A.100% OPEN,SHORT&INTERMITANCE TEST.
   B.CONDUCTOR RESISTANCE: 3ohms MAX:
   C.INSULATION RESISTANCE: 5M Min/,10ms:
8. ALL MUST BE RoHS COMPLIANT.

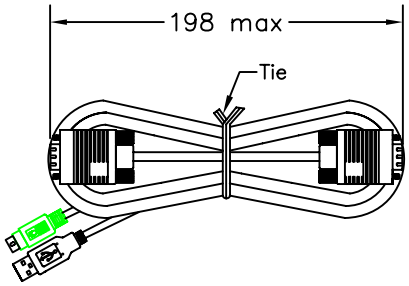

PACKING: 1PCS/PE BAG+ITEM NO LABEL.

COMPANY	DDC		ITEM NO.	ACC-2101-1.8M	NO	B	Part Name	HDB15MM-IBM 3COA+9C		
REVISION	DATE	DISCRIPTION	DRAWN BY		SPEC		level one		SCALE	NON
REV.A/0	2014.11.11		DESIGNED BY						UNIT(mm)	
			APPROVAL BY						PAGE	1/1