Register your product and get support at

www.philips.com/welcome

SA2420BT

SA2421BT

SA2422BT

SA2425BT

SA2426BT

SA2427BT

SA2440BT

SA2441BT

SA2442BT

SA2445BT

SA2446BT

SA2447BT

EN User manual 3

PHILIPS

Contents

1 Important safety information 4
General maintenance 4
Recycling the product 6

2 Your new Digital Audio Player 7
What's in the box 7

3 Getting started 8
General overview of the LUXE 8
Detailed overview of the controls 9
Connect and charge 10
Connect the supplied USB cable 10
Connect the earphones and extension cable 10
Connect the supplied charger 11
Battery level indication 11
Install the Philips Device Manager software 11
First-time Bluetooth® connection setup 12
Bluetooth® setup with forced pairing 12
Transfer music to the LUXE 13
Organize your music on the LUXE 13

4 Enjoy 14
Turn the LUXE on and off 14
Automatic standby and shut-down 14
Listen to your music 14
Find your music 15
Radio 15
Phone calls 16
Accept phone calls 16
Call the last used number 17
Transfer a call back to your mobile phone 17
Change the ringtone of the LUXE 17
Use the LUXE to store and carry data files 17

5 Troubleshooting 18

6 Technical data 19
Supported music file formats 19
LED indicators and their meanings 19

7 Glossary 20

1 Important safety information

Modifications

Modifications not authorized by the manufacturer may void user's authority to operate this device.

Philips
SA2420BT SA2421BT SA2422BT
SA2425BT SA2426BT SA2427BT
SA2440BT SA2441BT SA2442BT
SA2445BT SA2446BT SA2447BT

Notice for the USA

This equipment has been tested and found to comply with the limits for a Class B digital device, pursuant to part 15 of the FCC Rules. These limits are designed to provide reasonable protection against harmful interference in a residential installation. This equipment generates, uses, and can radiate radio frequency energy and, if not installed and used in accordance with the instruction manual, may cause harmful interference to radio communications. However, there is no guarantee that interference will not occur in a particular installation. If this equipment does cause harmful interference to radio or television reception, which can be determined by turning the equipment off and on, the user is encouraged to try to correct the interference by o ne or more of the following measures:

- Relocate the receiving antenna.
- Increase the separation between equipment and receiver.
- Connect the equipment into an outlet on a circuit different from that to which the receiver is connected.
- Consult the dealer or an experienced radio/TV technician for help.

Notice for Canada

This Class B digital apparatus complies with Canadian ICES-003.

The set complies with the FCC-Rules, Part-15 and with 21 CFR 1040.10. Operation is subject to the following two conditions:

- This device may not cause harmful interference, and
- This device must accept any interference received, including interference that may cause undesired operation.

General maintenance

Caution

- To avoid damage or malfunction:
- Do not expose the player to excessive heat caused by heating equipment or direct sunlight.
- Do not drop your player or allow objects to fall on your player.
- Do not allow your player to be submerged in water. Do not expose headphone socket or battery compartment to water, as water entering the set may cause major damage.
- Active mobile phones in the vicinity may cause interference.
- Back up your files. Ensure that you retain the original files you have downloaded to your device. Philips is not responsible for any loss of data if the product becomes damaged or not readable / legible.
- Manage (transfer, delete, etc.) your music files only with the supplied music software to avoid problems.
- Do not use any cleaning agents containing alcohol, ammonia, benzene, or abrasives as these may harm the set.
- Active mobile phones in the vicinity may cause interference.
- Back up your files. Please ensure that you retain the original files you have downloaded to your device. Philips is not responsible for any loss of data if the product becomes damaged or not readable / legible.
- Manage (transfer, delete, etc.) your music files only with the supplied or recommended software to avoid problems.

About operating and storage temperatures

- Operate in a place where temperature is always between 0 and 35°C (32 to 95°F)
- Store in a place where temperature is always between -20 and 45°C (-4 to 113°F).
- Battery life may be shortened in low temperature conditions.

Replacement parts/accessories:
Visit www.philips.com/support to order replacement parts/accessories.

Hearing Safety

Listen at a moderate volume:
Using headphones at a high volume can impair your hearing. This product can produce sounds in decibel ranges that may cause hearing loss for a normal person, even for exposure less than a minute. The higher decibel ranges are offered for those that may have already experienced some hearing loss.
Sound can be deceiving. Over time your hearing 'comfort level' adapts to higher volumes of sound. So after prolonged listening, what sounds 'normal' can actually be loud and harmful to your hearing. To guard against this, set your volume to a safe level before your hearing adapts and leave it there.
To establish a safe volume level:
Set your volume control at a low setting.
Slowly increase the sound until you can hear it comfortably and clearly, without distortion.
Listen for reasonable periods of time:
Prolonged exposure to sound, even at normally 'safe' levels, can also cause hearing loss.
Be sure to use your equipment reasonably and take appropriate breaks.
Be sure to observe the following guidelines when using your headphones.
Listen at reasonable volumes for reasonable periods of time.
Be careful not to adjust the volume as your hearing adapts.
Do not turn up the volume so high that you can't hear what's around you.
You should use caution or temporarily discontinue use in potentially hazardous situations.
Do not use headphones while operating a motorized vehicle, cycling, skateboarding, etc.; it may create a traffic hazard and is illegal in many areas.

Copyright information
All other brands and product names are trademarks of their respective companies or organizations.
Unauthorized duplication of any recordings whether downloaded from the Internet or made from audio CDs is a violation of copyright laws and international treaties.
The making of unauthorized copies of copy-protected material, including computer programs, files, broadcasts and sound recordings, may be an infringement of copyrights and constitute a criminal offenseThis equipment should not be used for such purposes.
The Windows Media and the Windows logo are registered trademarks of Microsoft Corporation in the United States and/or other countries.
Be responsible! Respect copyrights.

Philips respects the intellectual property of others, and we ask our users to do the same. Multimedia content on the internet may have been created and/or distributed without the original copyright owner's authorization. Copying or distributing unauthorized content may violate copyright laws in various countries including yours.
Compliance with copyright laws remains your responsibility.
The recording and transfer to the portable player of video streams downloaded to your computer is intended only for use with public domain or properly licensed content. You may only use such content for your private, non-commercial use and shall respect eventual copyright instructions provided by the copyright owner of the work. Such instruction may state that no further copies shall be made. Video streams may include copy protection technology that prohibits further copying. For such situations the recording function will not work and you will be notified with a message.

Recycling the product

Your product is designed and manufactured with high quality materials and components, which can be recycled and reused.
When you see the crossed-out wheel bin symbol attached to a product, it means the product is covered by the European Directive 2002/96/EC:

Never dispose of your product with other household waste. Please inform yourself about the local rules on the separate collection of electrical and electronic products. The correct disposal of your old product helps prevent potentially negative consequences on the environment and human health.
Your product contains a built-in rechargeable battery covered by the European Directive 2006/66/EC, which cannot be disposed of with normal household waste. To safeguard the functionality and safety of your product, take your product to an official collection point or service centre where a professional can remove or replace the battery as shown:

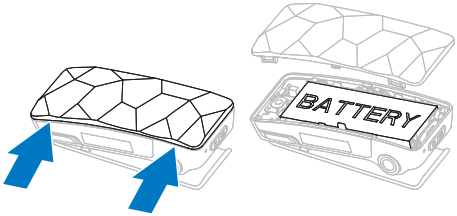

Please inform yourself about the local rules on separate collection of batteries. The correct disposal of batteries helps prevent potentially negative consequences on the environment and human health.

2 Your new Digital Audio Player

The LUXE allows you to

- play MP3 and unprotected WMA files
- listen to FM radio
- accept/place calls from your phone via Bluetooth®*

* Requires paring with a Bluetooth® enabled phone.

What's in the box

The LUXE comes with a box that you can use to store the LUXE or other items.
The following accessories are included with the LUXE:

Player

Earphones

Earphone extension cable

USB cable

AC charger

Quick start guide

3 Getting started

General overview of the LUXE

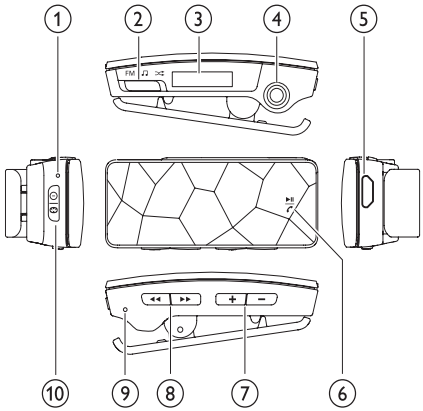

1. Microphone
2. FM / ♫ / ⤮ slide selector
3. LCD display
4. Earphone jack
5. USB connector
6. ▶II/ play/pause / phone
7. + / – increase/decrease the volume
8. ◀◀ / ▶▶ navigate
9. Reset
10. ⏻ / on/off / Bluetooth®

Detailed overview of the controls

The LUXE offers the following control options:

Mode	Functions	Action
♫ / ⤮	▶❚❚ /✆	Press 1x: toggle between play and pause
	◀◀	Press 1x at the beginning of a song: go to beginning of previous song Press 1x when playing: go to beginning of current song Press and hold when playing: scan backwards through current song Press 2x: skip to previous folder (if folders are present)
	▶▶	Press 1x: go to beginning of next song Press and hold when playing: scan forward through current song Press 2x: skip to next folder (if folders are present)
	+/ –	Press 1x: increase / decrease the volume one step at a time Press and hold: quickly increase / decrease the volume Press both buttons simultaneously: toggle FullSound™ on / off
	⏻ / ᛒ	Press and hold for 2 seconds: toggle the LUXE on / off Press and hold for 4 seconds: activate forced Bluetooth® pairing mode
FM	▶❚❚ /✆	Press 1x: toggle the radio sound between mute and unmute
	◀◀	Press 1x: scan frequencies downwards Press and hold: quickly skip to lower frequency
	▶▶	Press 1x: scan frequencies upwards Press and hold: quickly skip to higher frequency
	+ / –	Press 1x: increase / decrease the volume one step at a time Press and hold: quickly increase / decrease the volume
	⏻ / ᛒ	Press 1x: toggle between Bluetooth® on and Bluetooth® off Press and hold for 2 seconds: toggle the LUXE on / off
✆	▶❚❚ /✆	Press 1x when a call comes in: accept the incoming call Press and hold when a call comes in: reject the incoming call Press 1x during a call: end the current call Press 2x during a call: toggle the microphone between mute / unmute Press 2x: redial the last used number (incoming call or outgoing call)
	+ / –	Press 1x: increase / decrease the volume Press and hold: quickly increase / decrease the volume
	⏻ / ᛒ	Press 1x: toggle between Bluetooth® on and Bluetooth® off Press during a call: toggle the current call between mobile phone and the LUXE Press and hold for 2 seconds: toggle the LUXE on / off

Source slide selector **FM** / ♫ / ⤮ :

FM	♫	⤮
Select FM radio source	Select music source	Select music source shuffle* mode

* In shuffle mode, the LUXE plays the songs in random order.

Connect and charge

The LUXE has a built-in battery that can be charged as follows:

- Directly from the power supply (with the supplied charger).
- Through the USB port of a computer (with the supplied USB cable).

Connect the supplied USB cable

1 Connect the USB plug of the supplied USB cable to a spare USB port on your computer.

2 Connect the small USB plug of the supplied USB cable to the small USB jack on the LUXE.

3 Turn on your computer.
↳ The LUXE charges.

Note

- For first-time use, allow the LUXE to charge for 3 hours.
- The charging animation stops and the icon is displayed when the charging process is completed.

Connect the earphones and extension cable

The supplied earphones have an integrated microphone.

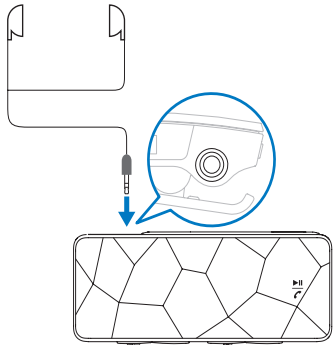

The microphone on the LUXE is automatically disabled when the supplied earphones are connected.
The short cable of the supplied earphones is designed to avoid entanglement.

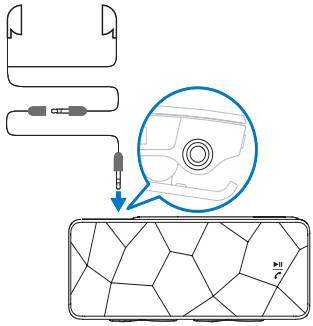

The supplied earphone extension cable can serve as FM antenna to improve radio reception.

Connect the supplied charger

1 Check that your local power supply corresponds to the specifications of the charger.

2 Use the supplied USB cable to connect the LUXE with the supplied charger.

3 Connect the AC power plug of the charger to a suitable power outlet.
   ↳ The LUXE charges.

Note

- For first-time use, allow the LUXE to charge for 3 hours.
- The charging animation stops and the icon is displayed when the charging process is completed.

Battery level indication

The display indicates the approximate levels of the battery status as follows:

100%	75%	50%	25%	0%

↳ A flashing battery screen indicates that the battery is low. The player saves all settings and switches off within 60 seconds.

Note

- Rechargeable batteries have a limited number of charge cycles. Battery life and number of charge cycles vary by use and settings.
- The charging animation stops and the icon is displayed when the charging process is completed.

Install the Philips Device Manager software

System requirements:

- Windows® (2000, XP, Vista)
- Pentium III 800 MHz processor or higher
- 128 MB RAM
- 500 MB hard disk space
- Interent connection
- Microsoft® Internet Explorer 6.0 or later
- USB port

1 Connect the mini USB plug of the supplied cable to the LUXE.

2 Connect the standard USB plug of the supplied cable to your computer.
   ↳ A pop-up window appears on the computer.

3 From the pop-up window, select **Install Philips Device Manager**.

4 Follow the on-screen instructions to complete the installation of the **Philips Device Manager**.

If the pop-up window fails to appear on the computer...

1 Select **My Computer** (WindowsXP® / Windows2000®) / **Computer** (WindowsVista®).

2 Right click on **Philips GoGear Luxe**.

3 Select **Install Philips Device Manager**.

4 Follow the on-screen instructions to complete the installation of the **Philips Device Manager**.

Can't find the file on the LUXE?

1 Ensure that your computer is connected to the Internet.

2 Select **My Computer** (WindowsXP® / Windows2000®) / **Computer** (WindowsVista®).

3 Right click on **Philips GoGear Luxe**.

4 Select **Install Philips Device Manager from the Internet**.

5 Follow the on-screen instructions to complete the installation of the **Philips Device Manager** from the Internet.

First-time Bluetooth® connection setup

The LUXE is set up and ready to connect to the first Bluetooth® discoverable and Bluetooth® enabled mobile phone within range.

1 Press and hold ⏻ / ✱ for approximately 4 seconds to turn on the LUXE.

↳ The power LED flashes once to indicate that the LUXE is turned on.

↳ The Bluetooth® LED flashes rapidly to indicate the pairing mode.

↳ On your mobile phone, enter 0000 as the pass code for the LUXE, if required.

↳ The LUXE connects to the first Bluetooth® discoverable and Bluetooth® enabled mobile phone that is within range.

The Bluetooth® connection was successful...

↳ The Bluetooth® LED flashes once every 5 seconds to indicate that the Bluetooth® connection is successfully established.

↳ You can accept or reject all your incoming mobile phone calls with the LUXE.

Once the connection is established, the LUXE automatically reconnects to your mobile phone every time you switch on the LUXE. (This requires that the automatic reconnection feature is enabled on your phone.)

The Bluetooth® connection failed...

↳ The display shows a crossed out Bluetooth® icon.

1 Follow the steps for a Bluetooth® setup with forced pairing (see 'Bluetooth® setup with forced pairing' on page 12) until the pairing is successful.

Note

- The Bluetooth® connection requires a distance of less than 10 meters between the LUXE and your mobile phone.
- To save battery power, the LUXE discontinues unsuccessful Bluetooth™ connection attempts after 10 minutes.

Bluetooth® setup with forced pairing

The following forced pairing method can be used in the event that the automatic connection fails:

1 Turn on your mobile phone.

2 Enable the Bluetooth® feature on your mobile phone.

3 Set your mobile phone Bluetooth® feature to discoverable.

4 Ensure that the LUXE is turned off when you start.

5 On the LUXE, press and hold ⏻ / ✱ for approximately 4 seconds.

↳ The LUXE enters pairing mode and searches for your mobile phone.

↳ The power LED flashes once to indicate that the LUXE is turned on.

↳ The Bluetooth® LED flashes rapidly to indicate the pairing mode.

↳ On your mobile phone, enter 0000 as the pass code for the LUXE, if required.

The Bluetooth® connection was successful...

↳ The Bluetooth® LED flashes once every 5 seconds to indicate that the Bluetooth® connection is successfully established.

↳ You can accept or reject all your incoming mobile phone calls with the LUXE.

Once the connection is established, the LUXE automatically reconnects to your mobile phone every time you switch on the LUXE. (This requires that the automatic reconnection feature is enabled on your mobile phone.)

The Bluetooth® connection failed...

↳ The display shows a crossed out Bluetooth® icon.

1 Repeat the forced pairing procedure until the pairing is successful.

Note

- The Bluetooth® connection requires a distance of less than 10 meters between the LUXE and your mobile phone.
- To save battery power, the LUXE discontinues unsuccessful Bluetooth™ connection attempts after 10 minutes.

Transfer music to the LUXE

The LUXE appears as a USB mass storage device in Windows® Explorer. You can transfer and organize music files to the LUXE through USB connection.

1 Click and highlight one or more songs to transfer between your computer and the LUXE.

2 Use drag and drop actions to complete the transfer.

Tip

- To transfer music CDs to the player: Rip (convert) the songs on your music CDs to MP3/WMA files with software such as Windows® Media Player. Copy the files into the LUXE with Windows® Explorer. Free versions of these programs can be downloaded from the Internet.

Organize your music on the LUXE

The LUXE can store hundreds of music tracks. To organize and facilitate locating your music, the LUXE allows you to sort your music into folders.

1 With the LUXE connected to the USB port of the computer, open Windows® Explorer.

2 Create folders in the mass storage of the LUXE.

3 Use drag and drop actions to sort your music into the folders.

Tip

- A double press on the ▶▶ or ◀◀ button allows you to skip forwards or backwards through the folders on the LUXE, so you can quickly locate your music.

4 Enjoy

Turn the LUXE on and off

1 To toggle between modes on and off, press and hold ⏻ / ✱ for approximately 2 seconds.

Automatic standby and shut-down

The LUXE has an automatic standby and shut-down feature that can save battery power.
With an active Bluetooth™ connection:
After 5 minutes in idle mode (no music plays, no button is pressed), the LUXE switches to standby mode.
In standby mode

- the display switches off
- an existing Bluetooth™ connection is maintained
  The LUXE switches back to active mode, when
- you press ▶II /✆ button
- your Bluetooth™-connected mobile phone receives an incoming call

Without an active Bluetooth™ connection:
After 10 minutes in idle mode (no music plays, no button is pressed), the LUXE shuts down (turns off).

1 Press and hold ⏻ / ✱ for approximately 2 seconds to turn the LUXE back on.

Listen to your music

The fully charged LUXE allows you to enjoy up to 10 hours of music.

1 Connect the earphones to the LUXE.

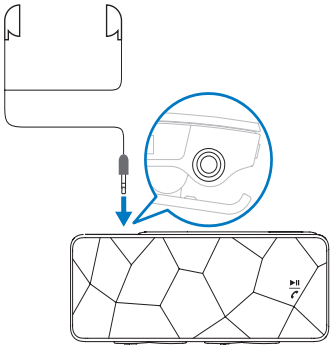

2 Set the slide selector to one of the followingmusic play options:

- ♫ - **Music** mode (play songs as you select them)
- ⤮ - **Shuffle*** mode (plays all songs in random order)

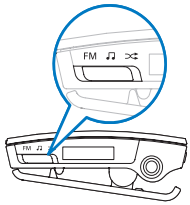

3 Press and hold ⏻ / ✱ for approximately 2 seconds to turn on the LUXE.

4 Press ▶II /✆ to start play.

5 Press − / + to decrease / increase the volume.

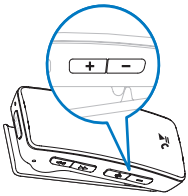

Note

- The LUXE has a repeat play function.
- *In **Shuffle** mode the LUXE plays all the songs in random order before it repeats a song.

Find your music

The LUXE can store hundreds of songs.

1 Press ▶▶ or ◀◀ to locate a song.

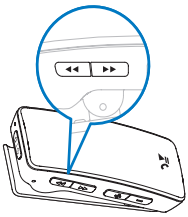

2 Press ▶II /✆ to toggle between play and pause.

Note

- This player offers no support for copyright protected (Digital Rights Management - DRM) WMA songs that were bought from the Internet.

Radio

The LUXE has an FM radio tuner. Here's how to listen to the radio:

1 Connect the supplied earphone extension cable (see note) to the supplied earphones.

2 Connect the earphone extension cable to the LUXE.

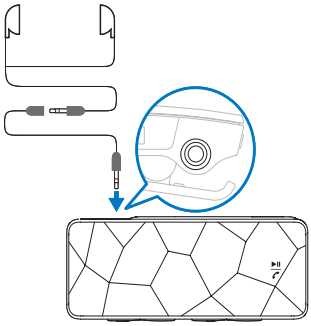

3 Press and hold ⏻ / ✱ for approximately 2 seconds to turn on the LUXE.

4 Set the slide selector to position **FM**.

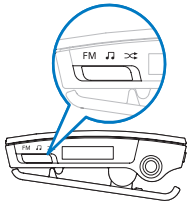

↳ The display shows the radio symbol for 1 second.

5 Press + / − to increase / decrease the volume.

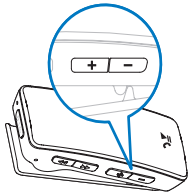

6 Press ◀◀ / ▶▶ to decrease / increase the radio frequency. (Hold button to scan radio frequencies down / up.)

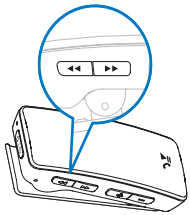

Note

- The supplied extension cable for the earphones serves as a radio antenna. Ensure you connect the extension cable and earphones properly for an optimal reception.

Phone calls

Accept phone calls

You can connect the LUXE to your mobile phone with Bluetooth® and accept incoming phone calls on the LUXE:

1 Follow the instructions to connect the item to your mobile phone with Bluetooth®.

2 Connect the supplied earphones.
When a phone call comes in on your mobile phone, the LUXE alerts you through a ringing alert tone. The LUXE mutes any currently active radio or music sound output.
The display shows the mobile phone symbol followed by the caller ID or phone number of the caller, if available. (For unknown callers, the display shows three dots.)

3 Press ▶II /✆ to accept the call.
- Press and hold ▶II /✆ to reject the call.

4 To end the call, press ▶II /✆ again.

Note

- For optimal reception, maintain a distance of less than 10 meters between the LUXE and your mobile phone.

Call the last used number

You can place a phone call to the last number that registered:

1 Press ▶❚❚ /✆ twice in quick succession to call the number of the last incoming/dialled caller.

2 To end the call, press ▶❚❚ /✆ again.

Transfer a call back to your mobile phone

The LUXE allows you to accept an incoming call from your mobile phone and then transfer it back to your mobile phone.

1 Press ▶❚❚ /✆ to accept the call.

2 Press ⏻ / ✱ to transfer the call back to your mobile phone.
   - Press ⏻ / ✱ again to retrieve the call back again to the LUXE.

Change the ringtone of the LUXE

When your connected mobile phone receives an incoming call, the LUXE alerts you with ringtone (through the earphones). For mobile phones that support ringtone streaming to the LUXE, you can hear the personalized ringtone of the mobile phone. For mobile phones that lack ringtone streaming support, the LUXE plays a standard ringtone.
You can customize the standard ringtone as follows:

1 With the LUXE connected to the USB port of the computer, open Windows® Explorer.

2 Drag and drop your ringtone file into the folder called RINGTONE on the LUXE.

3 The next time your mobile phone receives an incoming call, the LUXE will play your ringtone.

Note

- In case the RINGTONE folder contains more than one ringtone file, the LUXE plays the file that is first by alphanumeric order.

Use the LUXE to store and carry data files

You can use the LUXE to store and carry data files.

1 Connect the LUXE to your computer.

2 On your computer, open **Windows® Explorer**.

3 Use drag and drop action to copy data files from your computer to the LUXE.

5 Troubleshooting

How do I reset my player?

- Insert a pen tip or other object into the reset hole located at the bottom of the LUXE. Hold until the player shuts down.
- If the reset option is unsuccessful, follow the steps how to recover the LUXE with the **Philips Device Manager**:

1 On your computer, select **Start** > **Programs** > **Philips Digital Audio Player** > **GoGear LUXE Device Manager** to launch the **Philips Device Manager**.

2 Press and hold the volume button + while you connect the LUXE to your computer.

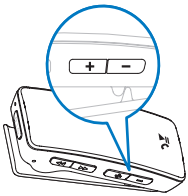

3 Keep holding the key until the **Philips Device Manager** acknowledges the LUXE and enters the recovery mode.

4 On the computer, click the **Repair** button and follow the instructions of the **Philips Device Manager** to complete the recovery process.

5 When the recovery is completed, disconnect the LUXE from your computer.

6 Restart the LUXE.

6 Technical data

Power Power supply: 150mAh Li-ion polymer internal rechargeable battery Play time (music/ radio): 10 hours Standby time: 100 hours Talk time (phone): 4 hours	**Storage media** Built-in memory capacity: SA242x/BT 2GB NAND Flash SA244x/BT 4GB NAND Flash **Software** Philips Device Manager: to restore and upgrade
System requirements Windows® 2000, XP, Vista Pentium III 800 MHz processor or higher 128 MB RAM 500 MB hard disk space Internet connection Microsoft® Internet Explorer 6.0 or later Sound card USB port	**Connectivity** Bluetooth® Headphone 3.5 mm USB 2.0 High speed Bluethooth® connection features: Call management: accept/reject/end calls, switch between call and music Caller ID display
Sound Sound enhancement: **FullSound™** Channel separation: 45 dB Frequency Reponse: 20 - 18 kHz Output power: 2x 2.4 mW Signal to noise ratio: > 84 dB	**Audio playback** Compression format: MP3 bit rates: 8-320 kps and VBR MP3 sample rates: 8, 11.025, 16, 22.050, 24, 32, 44.1, 48 kHz WMA (unprotected) bit rates: 5 - 192 kbps VBR WMA sample rates: 8, 11.025, 16, 22.050, 24, 32, 44.1, 48 kHz
Display White backlight LCD 96 x 16 pixels	**Music transfer** Drag and drop in Windows® Explorer

Supported music file formats

The LUXE supports the following music formats:

- MP3
- unprotected WMA

LED indicators and their meanings

The LUXE has the following LED indicators:

- Power LED for all power-related alerts = red
- Bluetooth® for all Bluetooth®-related alerts = blue (yellow on the red version LUXE)

Here are the power LED indicators and their meanings:

Indicator	Meaning
Once on and off (approximately 1 second)	LUXE turned on / off
Quick flashes for 1 minute	Battery low
1 flash every 3 seconds	LUXE is charging
LED is on	LUXE is fully charged (continues until LUXE is unplugged)

Here are the Bluetooth® LED indicators and their meanings:

Indicator	Meaning
Quick flashes for 2 minutes	LUXE is in Bluetooth® pairing mode
1 flash every 5 seconds	Bluetooth® is connected (also during a call)
Quick flashes (synchronized with ringtone)	Incoming call on mobile phone
2 flashes every second	Bluetooth® attempts to reconnect

7 Glossary

B

Bluetooth®
Bluetooth® is a short-range wireless protocol that is meant to allow mobile devices to share information and applications without the worry of cables or interface incompatibilities. The name refers to a Viking King who unified Denmark. Operates at 2.4 GHz. For more information, see bluetooth.com.

D

Decibel (dB)
A unit of measure used to express relative difference in power or intensity of sound.

F

FullSound
FullSound™ is an innovative technology designed by Philips. FullSound™ faithfully restores sonic details to compressed music, enhancing it to provide a full sound experience without any distortion.

L

LCD (Liquid Crystal Display)
Probably the most common way to show visual information on non-computer electronic equipment.

M

MP3
A file format with a sound data compression system. MP3 is the abbreviation of Motion Picture Experts Group 1 (or MPEG-1) Audio Layer 3. With the MP3 format, one CD-R or CD-RW can contain about 10 times more data than a regular CD.

S

Shuffle
A feature that plays audio files (tracks) in random order.

Streaming
A technique for transferring data such that it can be processed as a steady and continuous stream. Streaming technologies are often used on the Internet because many users do not have fast enough access to download large multimedia files quickly, so the client browser or plug-in can start displaying the data before the entire file has been transmitted.

V

Volume
Volume is the most common word used to specify the control of relative loudness of sounds. It also pertains to the function on many electronic devices that is used to control the loudness.

W

WMA (Windows Media Audio)
An audio format owned by Microsoft, is a part of Microsoft Windows Media technology. Includes Microsoft Digital Rights Management tools, Windows Media Video encoding technology, and Windows Media Audio encoding technology.

100% recycled paper
100% papier recyclé

© 2008 Koninklijke Philips Electronics N.V.
All rights reserved.
Document order number: 000000000000

wk8431