Register your product and get support at

www.philips.com/welcome

CAM200

User manual

PHILIPS

PHILIPS

Philips Consumer Lifestyle

HK-1152-CAM300WH

(Report No. / Numéro du Rapport)

Year 2011

(Year in which the CE mark is affixed / Année au cours de laquelle le marquage CE a été apposé)

EC DECLARATION OF CONFORMITY

(DECLARATION DE CONFORMITE CE)

We / Nous, PHILIPS CONSUMER LIFESTYLE B.V.
(Name / Nom de l'entreprise)

TUSSENDIEPEN 4, 9206 AD DRACHTEN, THE NETHERLANDS
(address / adresse)

Declare under our responsibility that the electrical product(s):
(Déclarons sous notre propre responsabilité que le(s) produit(s) électrique(s):)

PHILIPS.....
(brand name, nom de la marque)

CAM200WH/00.....
(Type version or model, référence ou modèle)

Digital Video
(product description, description du produit)

To which this declaration relates is in conformity with the following harmonized standards:
(Auquel cette déclaration se rapporte, est conforme aux normes harmonisées suivantes)

(title, number and date of issue of the standard / titre, numéro et date de parution de la norme)

EN60950-1:2006+A11:2009
EN55022:2006+A1:2007
EN55024:1998+A1:2001+A2:2003
EN61000-3-3:2008
EN61000-3-2:2006+A1:2009+A2:2009
EN301489-1 V1.8.1 :2008
EN301489-17 V2.1.1 : 2009
EN300328 V1.7.1:2006
EN62311:2008

Following the provisions of :
(Conformément aux exigences essentielles et autres dispositions pertinentes de:)

1999/5/EC (R&TTE Directive)
2006/95/EC (Low Voltage Directive)
2004/108/EC (EMC Directive)

And are produced under a quality scheme at least in conformity with ISO 9001 or CENELEC Permanent Documents
(Et sont fabriqués conformément à une qualité au moins conforme à la norme ISO 9001 ou aux Documents Permanents CENELEC)

The Notified Body.....*PHOENIX TESTLAB/0700*.....performed .....*Notified Body Opinion*
(L'Organisme Notifié) *(Name and number/ nom et numéro)* (a effectué) (description of intervention / description de l'intervention)

And issued the certificate, ...11-114607
(et a délivré le certificat) *(certificate number / numéro du certificat)*

Remarks:
(Remarques:)

Drachten, Netherlands, Jan.04, 2012
(place,date / lieu, date)

A.Speelman, CL Compliance Manager
(signature, name and function / signature, nom et fonction)

Contents

1 Important 4

Safety 4
Notice 4

2 Your camcorder 6
Introduction 6
What's in the box 6
Functional overview 7

3 Get started 8
Load the Micro SD card 8
Turn on 8
First-time setup 8
Charge the built-in battery 10

4 Use your camcorder 11
Record video 11
Take pictures 11
Play 11
Share your movies or pictures wirelessly 12
Adjust settings 14

5 Use more of your camcorder 15
View video or pictures on TV through HDMI 15
Install and use the camcorder software 15

6 Technical specifications 17

7 Frequently asked questions (FAQ) 18

1 Important

Safety

1. Read these instructions.
2. Keep these instructions.
3. Heed all warnings.
4. Follow all instructions.
5. Do not use this apparatus near water.
6. Clean only with dry cloth.
7. Do not block any ventilation openings. Install in accordance with the manufacturer's instructions.
8. Do not install near any heat sources such as radiators, heat registers, stoves, or other apparatus (including amplifiers) that produce heat.
9. Only use attachments/accessories specified by the manufacturer.
10. Refer all servicing to qualified service personnel. Servicing is required when the apparatus has been damaged in any way, such as power-supply cord or plug is damaged, liquid has been spilled or objects have fallen into the apparatus, the apparatus has been exposed to rain or moisture, does not operate normally, or has been dropped.
11. Apparatus shall not be exposed to dripping or splashing.
12. Do not place any sources of danger on the apparatus (e.g. liquid filled objects, lighted candles).

Any changes or modifications made to this device that are not expressly approved by Philips Consumer Lifestyle may void the user's authority to operate the equipment.

Notice

CE 0700 (!)

This product complies with the radio interference requirements of the European Community.

CE 0700 (!) R&TTE Directive 1999/5/EC

BG ✓	RO ✓	BE ✓	LT ✓	LI ✓	IS ✓	SE ✓
DK ✓	ES ✓	CZ ✓	NL ✓	AT ✓	LV ✓	SK ✓
FR ✓	UK ✓	FI ✓	PT ✓	CY ✓	MT ✓	PL ✓
HU ✓	NO ✓	GR ✓	SI ✓	EE ✓		
IT ✓	LU ✓	IE ✓	CH ✓	DE ✓		

The device can be operated in the EU without restrictions indoor, but cannot be operated outdoors in France in the whole of the band until further notice.
This product complies with the requirement of the 1999/5/EC directive.
The minimum distance between the user and/or any bystander and the radiating structure of the transmitter is 15cm.
To check the EC DECLARATION OF CONFORMITY, go to http://download.p4c.philips.com/files/c/cam200_00/cam200_00_doc_aen.pdf.

Your product is designed and manufactured with high quality materials and components, which can be recycled and reused.

When this crossed-out wheeled bin symbol is attached to a product it means that the product is covered by the European Directive 2002/96/EC.
Please inform yourself about the local separate collection system for electrical and electronic products.

Please act according to your local rules and do not dispose of your old products with your normal household waste. Correct disposal of your old product helps to prevent potential negative consequences for the environment and human health.

Your product contains batteries covered by the European Directive 2006/66/EC, which cannot be disposed with normal household waste.Please inform yourself about the local rules on separate collection of batteries because correct disposal helps to prevent negative consequences for the environmental and human health.

Note

- The safety logo and power rating information are located at the inner side of the protective cover at the bottom of the camcorder.

Always bring your product to a professional to remove the built-in battery.

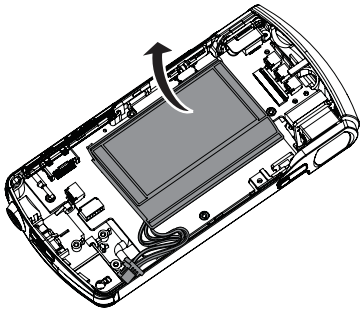

2 Your camcorder

Introduction

With this portable camcorder, you can:

- take full HD (1080P) or VGA movies
- take pictures
- play recorded movies or pictures on the large screen of a TV wirelessly or through HDMI connection
- upload recorded movies or pictures to the Internet wirelessly or through a PC/Mac

What's in the box

Make sure that the following items are packed in the box:

- Camcorder
- Quick start guide
- USB cable (with a mini USB connector)
- Pouch
- Hand strap

Functional overview

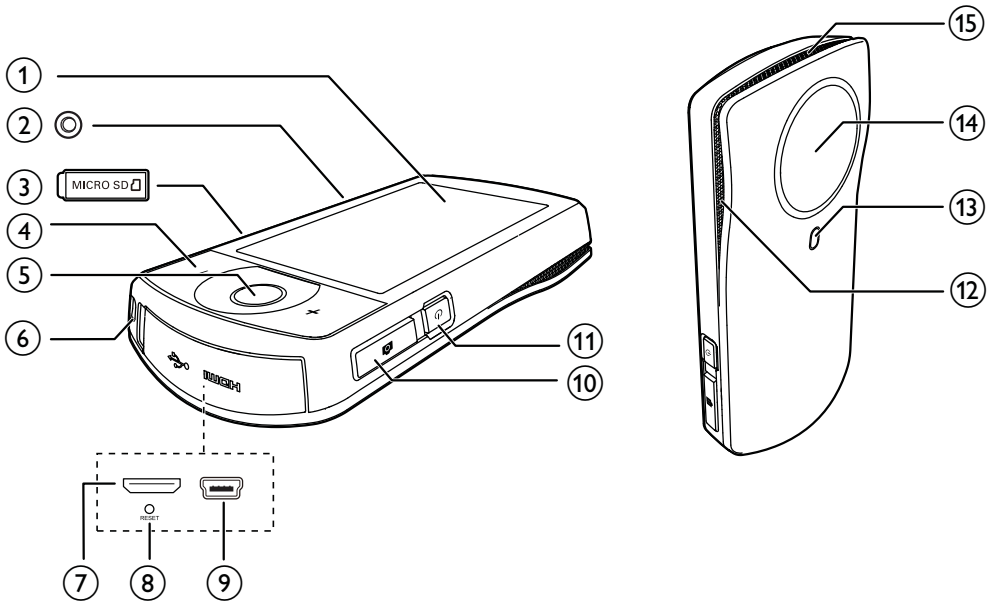

1. **Touch screen**
2. **Tripod socket**
3. **MICRO SD**
   - Load a Micro SD card.
4. **+/-**
   - In viewfinder mode, zoom in/out.
   - During video play, change the volume.
5. **Video shutter button (red)**
   - In picture viewfinder mode, switch to video viewfinder mode.
   - In video viewfinder mode, start/stop video recording.
   - In play mode, switch to video viewfinder mode.
6. **Hand strap hole**
7. **Mini HDMI socket**
   - Connect to a TV through an HDMI cable with a mini HDMI connector (type C).
8. **RESET**
   - Restore default settings.
9. **Mini USB socket**
   - Connect to a PC/Mac through the supplied USB cable.
10. **Picture shutter button (📷)**
    - In video viewfinder mode, switch to picture viewfinder mode.
    - In picture viewfinder mode, take a picture.
    - In play mode, switch to picture viewfinder mode.
11. **⏻**
    - Turn on/off the camcorder.
12. **Built-in microphones**
13. **Flashlight**
14. **Lens**
15. **Built-in speaker**

3 Get started

Load the Micro SD card

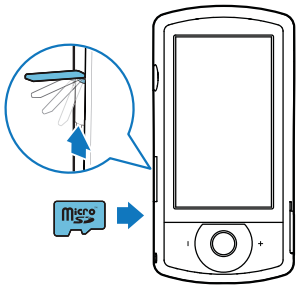

1 Flip open the protective cover on the Micro SD card socket.

2 Insert a Micro SD card (not supplied) into the socket.
- Make sure that the Micro SD card is not write-protected.
- Make sure that the metal contact of the card faces down.

3 Close the protective cover securely.

Turn on

- Press ⏻.
  ↳ For first-time users, a menu for OSD language selection is displayed (see 'First-time setup' on page 8).

Tip

- To save energy, the camcorder turns off automatically after being idle for 3 minutes. To turn on the camcorder again, press ⏻.

To turn off the camcorder:

- Press ⏻ again.
  ↳ The backlight on the touch screen turns off.

First-time setup

More setting options are described in the 'Adjust settings' section (see 'Adjust settings' on page 14).
When you turn on the camcorder for the first time, a menu for OSD language selection is displayed.

1 On the touch screen, tap the scroll bar (▲ / ▼) to move upward/downward.

2 Tap a language to highlight it.

3 Tap **[Done]** to confirm.
  ↳ A date setting menu is displayed.

4 Tap ▲ / ▼ to set the day, month, and year successively.

5 Tap **[OK]** to confirm the date setting.
  ↳ A time setting menu is displayed.

6 Tap ▲ / ▼ to set the hour and minute successively.

7 Tap **[OK]** to confirm the time setting.
  ↳ The first-time setup is complete.
  ↳ The camcorder enters video viewfinder mode.
  ↳ A settings bar is displayed at the bottom of the touch screen.

Tip

- To hide the settings bar, tap any blank area on the touch screen. To show the settings bar again, tap ⋯ at the bottom right corner of the touch screen.

Select a resolution

1 In viewfinder mode, tap ⚙ to access the settings menu.

2 Tap **[Resolution]**.

3 Tap **[Video]** or **[Photo]**.

4 Tap a video or photo resolution you like to highlight it.

5 Tap **[Done]** to confirm the setting.

Select a special effect

You can select one of the following special effects: **[Normal]**, **[Black & White]**, **[Sepia]** and **[Color filter]**.

1 In viewfinder mod, tap ⊙ to access **[Effects]** setting.

2 Tap ◀ / ▶ to select a special effect you like.

3 Tap **[OK]** to confirm the setting.

Select a scene

You can select one of the following scenes: **[Auto]**, **[Skin]**, **[Snow/Beach]**, **[Night]**, **[Backlight]** and **[Sunset]**.

1 In viewfinder mode, tap ▤ to access **[Scene]** setting.

2 Tap ◀ / ▶ to select a scene you like.

3 Tap **[OK]** to confirm the setting.

Select a flash mode

- In viewfinder mode, tap ⚡ repeatedly to select a flash mode:
  - (picture) auto flash, flash on or flash off
  - (video) flash on or flash off

Set up Wi-Fi connection

1 In viewfinder mode, tap ⚙ to access the settings menu.

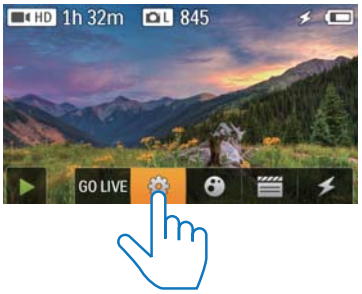

2 Tap **[Connectivity]** -> **[WiFi]** to access Wi-Fi setting.

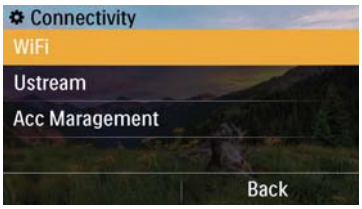

3 Tap **[On]** to highlight the option, then tap **[Done]** to confirm.

↳ The camcorder starts to detect Wi-Fi networks available.

↳ After a while, a list of detected Wi-Fi networks is displayed.

4 Tap your home Wi-Fi network in the list.

5 Tap **[OK]** to confirm.

6 Enter your Wi-Fi password (if set).

7 Tap **[OK]** to confirm your setting.

↳ After successful connection, a signal icon ( ) is displayed at the top right corner of the touch screen.

Tip

- When the camcorder is powered off and then powered on again, the camcorder is connected to the same Wi-Fi network automatically.
- To switch to another Wi-Fi network, repeat the above procedures.

Charge the built-in battery

1 Open the protective cover at the bottom of the camcorder.

2 Connect the camcorder to a PC through the supplied USB cable.

↳ The charge status is shown on the touch screen of the camcorder.

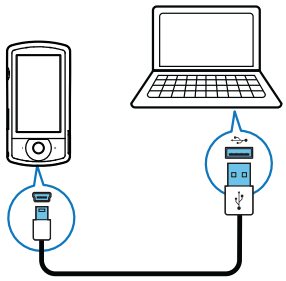

3 When the battery is full, disconnect the USB cable and close the protective cover.

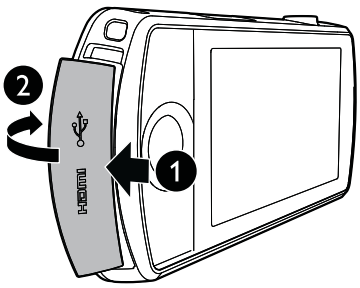

Tip

- The camcorder is fully charged for first-time use.
- It takes about 3 hours to fully charge the built-in battery through a PC.

You can also charge the camcorder through a USB adaptor (not supplied) connected to mains power. The charge time is about 2 hours.

4 Use your camcorder

Record video

Note

- By default, the camcorder enters video viewfinder mode automatically after power-on.

1 Hold the camcorder steadily and aim the lens as needed.

2 Press the video shutter button (red) to start recording.
   ↳ A red time indicator is displayed at the top left corner of the touch screen.

3 Press **+/-** to zoom in/out if necessary.

4 Press the video shutter button again to end recording.
   ↳ **[Video saved]** is displayed briefly.

Take pictures

1 Press the picture shutter button (📷) to switch to picture recording mode.

2 Hold the camcorder steadily and aim the lens as needed.

3 Press **+/-** to zoom in/out if necessary.

4 Press 📷 down halfway to adjust the focus.

5 Press 📷 down completely to take a picture.
   ↳ **[Picture saved!]** is displayed briefly.

Play

1 In viewfinder mode, tap ▶ on the touch screen to switch to play mode.
   ↳ The last recorded media is displayed.
   ↳ An option menu is displayed at the bottom of the touch screen.

2 Swipe to the left/rights to select a picture or video clip for play.

3 If the selected file is a video clip, tap ▶ in the middle of the screen to start play.
   - To pause play, tap any place of the swivel touch screen.

Preview

- In play mode, tap ▦.
   ↳ The thumbnails of 12 files are displayed on each page.
   - To select a file, tap the file directly.
   - Swipe the screen upward/downward to view the previous/next page.

Delete a file

1 In play mode, swipe to the left/right on the touch screen to select a file.

2 Tap 🗑 to access the window for deletion confirmation.

3 Tap **[Yes]** to confirm the deletion operation.
   ↳ **[Deleted!]** is displayed briefly.
   - To exit the operation, tap **[No]**.

You can also delete files in batches.

1 During preview, tap 🗑.

2 Tap a file.
   ↳ A check mark is displayed in the middle of the file image.

3 Repeat step 2 to select more files.

4 Tap **[Selected]**, then tap **[Yes]** to delete the selected files.

To delete all files:

1 During preview, tap 🗑.

2 Tap **[All]** (all), then tap **[Yes]** to delete all files.

Tag a file

1 In play mode, tap a file.

2 Tap ✎ to tag the file.
- To untag the file, tap ✎ again.

3 Repeat steps 1 to 2 to tag more files.

You can also tag files in batches during preview.

1 During preview, tap ✎.

2 Tap files you want to tag.
↳ The tagged files are highlighted in yellow.
- To untag a file, tap the file again until the file is not highlighted.
- To untag all files, tap **[Remove all]**at the bottom of te touch screen.

3 Tap**[Done]** at the bottom of the touch screen to confirm.

Play tagged files

1 During preview, tap ☰.
↳ A tag operation menu is displayed.

2 Tap an option to highlight it, then tap **[Yes]** for confirmation.

Menu option	Description
[Play all]	Play all files.
[Play tagged]	Play tagged files only.
[Clear all tags]	Untag all files.

Trim a video clip

1 In play mode, swipe to the left/right on the swivel touch screen to select a recorded video clip.

2 Tap ✂ to access the trim window.
↳ A bar for video trimming is displayed at the top of the window.

3 Tap the left ruler and move to the right to set the starting point you want.

4 Tap the right ruler and move to the left to set the starting point you want.

5 Tap **[Preview]** to preview the edited video clip.

6 After confirmation, tap**[Save New]** to save the edited video clip as a new file.

Zoom in a picture

1 In play mode, swipe to the left/right on the swivel touch screen to select a picture.

2 Press **+** to zoom in the picture.

3 Tap the screen to pan through the enlarged picture.
- To return to normal view, press **-** repeatedly or tap the cross mark on the left.

Adjust volume level during video play

- During video play, press **+/-**.

Share your movies or pictures wirelessly

With the Wi-Fi connection of CAM200, you can:
- broadcast what you are recording to UStream in real time;
- share your videos/pictures to YouTube, Facebook, Twitter or Picasa;
- share your videos/pictures to a DLNA-certified display device with a simple swipe.

Share to the Internet wirelessly

Note

- Make sure that your Wi-Fi router is connected to the Internet.

Broadcast to UStream

Note

- If you do not have a UStream account, register one at the UStream website.
- Make sure that the Wi-Fi connection is good enough for successful broadcast. Otherwise, the video streaming may not be able to stay on air.

1 In viewfinder mode, tap **GO LIVE**.

2 Enter your UStream account name and password for login.

3 After successful login, start video recording on your camcorder.
   ↳ The video is broadcast to UStream in real time.

Share to YouTube, Facebook, Twitter or Picasa

Note

- If you do not have a YouTube, Facebook, Twitter or Picasa account, register one at the respective website.

1 Select a recorded picture or video clip (see 'Play' on page 11).

Online service	Size limitation to file to be uploaded
YouTube	Up to 15 minutes
Facebook	Up to 10 minutes of video with the size less than 100M
Twittter (Twitvid)	Up to 2G video files
Picasa	Up to 1G video and photo files

2 Tap ⊠.
   ↳ An option menu is displayed.

3 Tap **YouTube**, **Facebook**, **Twitter** or **Picasa** in the list.

4 Enter your account name and password for login.
   ↳ After successful login, a progress window is displayed until upload of the selected file is complete.

Share to a display device wirelessly

Note

- Make sure that your display device is connected to the same Wi-Fi network as the camcorder.

1 Select a recorded picture or video clip (see 'Play' on page 11).

2 Tap ⊠.
   ↳ An option menu is displayed.

3 Tap **[Device]**.

4 Tap a display device (for example, a DLNA-certified TV, photo frame, and so on) in the shown list of available devices.
   ↳ After successful connection, the selected picture or video clip is uploaded automatically.

- To share more files, select another recorded picture or video clip, then swipe the screen upward.
  ↳ After a while. you can view the selected file on your display device.

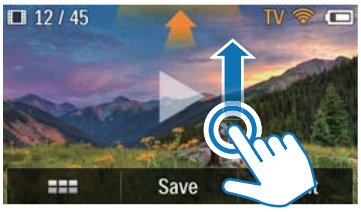

Adjust settings

1 In viewfinder mode, tap ⚙ to access the settings menu.
2 Tap an item to show its subitems.
3 Tap a subitem to show the options available.
4 Tap the option you prefer.
5 Tap **[Done]** or **[OK]** (for date/time setting) to confirm the setting.

[Resolution]
Select the video or picture resolution.
- **[Video]** - Select the video resolution: **[Full HD]** (for best video quality),**[Sports HD]** (for filming of fast moving objects), **[Share HD]**(minimum video file size for easy sharing) or **[Standard]** (reduced video file size).
- **[Photo]** - Select the picture size. The larger the size, the higher the resolution: **[5M]**, **[8M]** or **[10M]**.

[Connectivity]
Set parameters related to Wi-Fi connection.
- **[WiFi]** - Enable and set up Wi-Fi connection (see 'Set up Wi-Fi connection' on page 9), or disable Wi-Fi connection.
- **[Ustream]** - Enable or disable real-time broadcast to UStream (see 'Broadcast to UStream' on page 13).
- **[Account Management]** - Set your user account of **YouTube**, **Ustream**, **Facebook**, **Picasa** or **Twitvid**.
- **[Expose to Network]** - Expose or hide the camcorder in the available DLAN network.

[Record settings]
- **[Capture sound]** - Turn on/off the capture sound.

[System settings]
Change system settings.
- **[Date and Time]** - Set the date and time (see 'First-time setup' on page 8).
- **[Language]** - Select your desired menu language (see 'First-time setup' on page 8).
- **[Format SD card]** - Clear contents from the micro SD card.
- **[TV system]** - Change this setting if the output video does not appear correctly on your TV.

5 Use more of your camcorder

View video or pictures on TV through HDMI

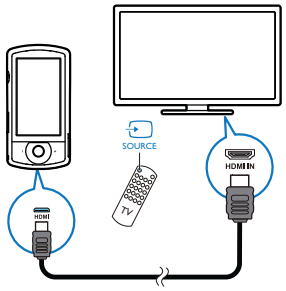

1 Connect an HDMI cable (not supplied) to:
- the **HDMI** socket on the camcorder (requiring a mini HDMI connector)
- the HDMI input socket on an HDTV

↳ An inquiry box for output mode selection is displayed.

2 To output the exact camcorder display with menu options to the TV screen, tap **[TV]** on the touch screen.
- To output the camcorder display without menu options to the TV screen, tap **[Live CAM]** on the touch screen.

3 On the camcorder, select a file and start play.

Install and use the camcorder software

With the software (ArcSoft MediaImpression HD Edition) available in the internal memory of the camcorder, you can import, edit, archive or upload your pictures/videos to the Internet easily.

Note

- The software supplied only works on PCs that operate Microsoft® Windows® XP, Vista and Windows 7.
- When you connect the camcorder to a Mac, use the iMovie software to import and edit your pictures/videos directly.

Install the camcorder software

1 Connect the camcorder to a PC (see 'Charge the built-in battery' on page 10).

2 If the software does not install automatically, find and click the **Setup** icon at **My Computer\CAM200**.

3 Follow the on-screen instructions to finish installation of the software.

Install and use the camcorder software

1 On your PC, click **Start\(All) Programs\ ArcSoft MediaImpression HD Edition**.

↳ The main screen of the software is displayed.

2 Click an option to select the corresponding operation.

3 Follow the on-screen instructions to complete the operation.

Transfer video/pictures to a PC/Mac

1 Connect the camcorder to a PC/Mac (see 'Charge the built-in battery' on page 10).
   ↳ It may take some time for the PC/Mac to recognize the camcorder.

2 Find your video/pictures at **My Computer\CAM200\DCIM\100MEDIA** or **My Computer\CAM200 SD\DCIM\100MEDIA**.

3 Copy any video/pictures you want to your designated folder in the PC/Mac.

Tip

- You can also import the video/picture files with the camcorder software (for PC) or iMovie (for Mac).

6 Technical specifications

Product information is subject to change without prior notice.

Maximum operation temperature	45°C
Image sensor	1/3.2" 8MP CMOS sensor
Operation modes	Movie record, picture record
Lens (focusing)	Auto focus f=4.76mm
Focus mode	Auto focus
Focus range	0.1m to Infinity
Aperture	F2.8
Digital zoom	5X
Exposure control	Auto
Exposure compensation	N/A
White balance	Auto
Auto power off	3 minutes
Memory	128MB (1Gbit) DDR2 + 128MB SLC (96MB for AP) + Micro-SD card Slot
Shutter type	Electronic
Shutter speed	1/2~1/4000 second
Picture file format	JPEG
Video compression format	*.MP4 (H.264)
Video resolution	Full HD (1080p 30) 1920 X1080 (30fps) Sports HD (720p 60) Share HD (720p 30) Standard (4:3) 640X480 (30fps)
Audio file format	AAC
Battery	1300mAh Li-ion (built-in); 120-minute battery life time based on VGA recording
PC interface	Mini USB 2.0 port
System support	Windows XP/Vista/ Windows 7, Mac (mass storage only)
TV out	NTSC/PAL selectable, Mini HDMI (type C)
Power rating	DC 5V, 500mA
Weight	0.075 kg
Dimensions (W x H x D)	54.7 x 106.3 x 19.6 mm

7 Frequently asked questions (FAQ)

Why is there no response when I use the camcorder?

- The camcorder is in power-off mode. Turn on the camcorder (see 'Turn on' on page 8).
- The built-in battery may be drained. Charge the battery (see 'Charge the built-in battery' on page 10).

Why is [Memory full!] displayed when I try to record?

- Make sure that the Micro SD card has been inserted correctly (see 'Load the Micro SD card' on page 8).
- The memory is used up. Save your video/pictures to a computer (see 'Transfer video/pictures to a PC/Mac' on page 16). Then delete files from your camcorder or clear the memory.

How much memory is needed for 1 hour of Full HD recording?

- The camcorder uses 4GB on average for 1 hour of Full HD video. For a more complex video recording (e.g. with lots of motions in the video, or a lot of panning), the camcorder will use more memory. This is done to maintain the video quality, but will increase the usage of memory.

Why do I have no access to folders on the camcorder from my computer?

- Make sure that the USB connection is correct.
- The camcorder turns off automatically 15 minutes after it is connected to a computer. You can press ⏻ to turn it on again.

Why do my video/pictures look blurry?

- Hold the camcorder steady in your hands during shooting.
- During video capture, do not move the camcorder too fast.
- Use a tripod (not supplied) if necessary.

Why do my video/pictures look distorted on a TV screen?

- Select the correct TV system.

How do I charge the camcorder?

- You can charge the camcorder via the supported USB cable. When you connect it to your PC/laptop it will automatically charge. You can also connect the camcorder to a USB charger via the supplied USB cable.

How long do I have to charge the camcorder?

- The camcorder is fully charged for first usage. The camcorder charge time when connected to your PC/laptop is 3.5 hours. When you charge it via USB adaptor, the charge time is 2 hours.

Where can I find an adaptor for CAM200 to charge the battery?

- CAM200 can be charged via regular USB adaptors, which are readily available in electronic stores. CAM200 is compliant to the iPhone 4 adapter.

Camcorder stopped responding?

- In the unlikely event that your camcorder stops responding, you can manually reset it. The reset button is located under the protective cover at the bottom of the camcorder. There you see a small opening above the HDMI connection. Please use a small prying object (like a pen) to insert and press gently for resetting. After you have reset the camcorder, please turn on the camcorder again, and set-up will start again.

Why does the camcorder sometimes not record the right color?

- To record both indoors and outdoors, and not having to change any settings, the camcorder has an automatic white-balance correction. This enables you to record both indoors and outdoors where the amount of light in the environment changes. If you move fast from outdoors to indoors, the camcorder might need some time to correct that, and in extreme cases the colors might seem a bit unnatural. However, after a few seconds this will be corrected automatically by the camcorder.

How do I connect it to a Windows PC/laptop?

- Connect the camcorder to your PC/laptop via USB. For easy sharing and editing, install the software program (Media Impression HD) that comes with the camcorder.

How do I connect it to a Mac?

- The camcorder works with the Mac via USB. The camcorder works great with the iMovie software, which is part of the iLife package that comes with your Mac. To transfer videos using iMovie, simply connect the camcorder to your Mac via USB, launch iMovie and start importing by clicking the camcorder icon. Select 'Use original quality' to ensure the best quality, and to maintain file sizes at an optimum.

Can I connect the camcorder directly to TV, DVD/Blu-ray player or Home Cinema set via their USB-port?

- The USB plug is designed to share your videos/pictures to your PC or Laptop. You can plug CAM200 directly into your TV, DVD/Blu-ray player or Home cinema set (called the host from this point on), and it will play the pictures that are stored on CAM200. To play the videos from CAM200, it depends if your host supports the file format H.264 of CAM200. Most Blu-ray enabled players are able to play this format.

What is Advanced Anti-shake?

- Advanced anti-shake lets you take great videos that you will always be proud to share. Steady and undistorted videos are ensured by gyro sensors that are armed with advanced algorithms. The sensors take measurements of the distance between the ground and the camera lens, and make the necessary corrections whenever the camcorder wobbles. This advanced technology gives you blur-free pictures every time, letting you capture the best moments in life in amazing videos.

How do I play my videos on TV?

- If you have a DLNA-compliant TV connected to the same Wi-Fi network as the camcorder, you can play recorded videos on the TV wirelessly (see 'Share to a display device wirelessly' on page 13).
- To play back on an ordinary TV, please use an HDMI connector (mini HDMI to standard HDMI) if your TV accepts HDMI input, or use the video-out cable provided.

Why is there no lens cover?

- The camcorder comes without a lens cover, keeping it simple to use and fuss-free. It is made of robust material that doesn't scratch under normal usage. A travel pouch and a lens cloth are provided, allowing you to keep the camcorder clean.

What format does the camcorder record in?

- The camcorder uses the same video format as Blu-ray players and discs – H.264. This highly sophisticated format delivers superb HD picture quality.

Tips on video making

- You can easily look back on fun moments and relive them with the camcorder. To enjoy these memories to the fullest, here are some simple video tips:
    - When capturing videos, hold your camcorder steady in your hand
    - Don't move too fast when panning (i.e. moving the camera horizontally) as it will be hard to follow what is captured when you review the video

- Try shooting from different angles – for example, from the side, from the front, or even from below. You can easily join the different video segments together with the PC software included

Can I log in to Twitter with the Facebook account?

- This camcorder only supports Twitter login with the Twitter account.

Why do I fail to upload my recordings online?

- There is size limitation to online sharing (see 'Share to YouTube, Facebook, Twitter or Picasa' on page 13).

In ENGLISH
Internet-enabled Device terms and conditions

Terms and Conditions of Use of your Philips Internet-enabled Device

Congratulations on your purchase of a Philips Internet-enabled Device ("Device"). In order to activate certain features on your Device relating to the streaming of content you must register your Device and agree to these Terms and Conditions of Use. Your act of registration constitutes your agreement to be bound by these Terms and Conditions of Use and will enable you to access these features. If you do not agree to these Terms and Conditions of Use, you may return your Device to the point of purchase. These Terms and Conditions of Use supplement, and do not replace, any terms, conditions or disclaimers which were provided with your purchase of the Device. All such terms, conditions and disclaimers remain in full force and effect.

Eligibility for Registration.

You must be at least 14 years of age to assume the responsibilities of these Terms and Conditions of Use. If you are under 14 years of age, you may not register unless one of your parents or legal guardians assumes the responsibilities of these Terms and Conditions of Use. Your act of registering constitutes your representation that you are either 14 years of age or, if you are under 14 years of age, that your parent or legal guardian has assumed the responsibilities of these Terms and Conditions of Use.

Restrictions on Modification of your Device

Your Device provides access to certain streams of content. As a condition of obtaining access to those streams through the Device, you agree not to tamper with or otherwise modify or attempt to modify the Device in any way (including through the use of software or by making physical alterations to the Device). You agree that you will not circumvent or attempt to circumvent technological measures employed to control access to, or the rights in, any content. You agree that you will not circumvent or attempt to circumvent any copy management system by any means. You agree that you will not decipher or attempt to decipher cryptographic keys or otherwise defeat or attempt to defeat any security features implemented in the Device or in the content streams. You agree that you will not use the Device for any unauthorized purpose or in contravention of any law or regulation.

Disclaimers Regarding Content

The streams of content which are accessible through your Device are not controlled or programmed by Philips. Rather, they are provided by third parties. Think of your Device (in addition to its other features) as a form of "tuner" which allows you to receive the content broadcast by many others outside of your local area. Since the content is provided by others, PHILIPS HAS NO EDITORIAL CONTROL OVER ANY OF THAT CONTENT RECEIVED THROUGH YOUR DEVICE AND, THEREFORE IS NOT LIABLE FOR CONTENT OR ITS NATURE OR DELIVERY. PHILIPS DOES NOT ENDORSE ANY OPINIONS EXPRESSED IN ANY CONTENT RECEIVED THROUGH YOUR DEVICE. PHILIPS DOES NOT GUARANTEE THE TRUTHFULNESS, ACCURACY, RELIABILITY, COMPLETENESS OR TIMELINESS OF CONTENT. YOU AGREE THAT ANY RELIANCE ON CONTENT IS AT YOUR OWN RISK.

Limitations on Access to Streams.

Philips does not guarantee access to any particular stream or to the content contained in any stream. Philips may, in its discretion, add or remove access to any specific stream or content at any time. Some streams are accessible through arrangements with online service providers which determine which streams are listed on their directories. Although Philips will strive to provide a good selection of online service providers, Philips does not guarantee continued access to any specific online service provider. Philips may, in its discretion, add or remove access to any specific online service provider.

Rights in Content

Content may be protected by copyright laws or other intellectual property or proprietary laws. In some situations, such as use of the Device in a commercial environment, it may be necessary for you to obtain, at your own risk, a license or other authorization to use such content. You agree that, in the event such a license or authorization is necessary, it is your responsibility to obtain any such license or authorization. You agree that you are solely liable for any damages you may incur resulting from your failure to obtain the proper license or authorization for use of the content accessible through the Device. You agree that Philips will have no liability to you with regard to your use of the content.

Changes in Features

Philips may, in its discretion, change the features of the Device, including adding features to, or removing features from, the Device. Some new features may require changes to these Terms and Conditions of Use. Your use of those new features will constitute your agreement to the revised Terms and Conditions of Use.

Software and Intellectual Property Rights

You may need to use certain software programs to use or have full access to certain features of the Device. You received certain software with the purchase of the Device and may receive other software from time to time in the future. Most of that software is contained in the Device and is not accessible to you. Some of that software is owned by Philips and some is owned by others. Your use of software owned by Philips is subject to these Terms and Conditions of Use and any applicable license agreement. Your use of software owned by others is governed by their applicable license agreements. Your use of software does not transfer any title or ownership rights in the software to you. Philips retains all its rights in software and other intellectual property, including copyrights, patent rights, and rights in its trademarks and trade names. You agree that you will not disassemble, decompile, create derivative works of, reverse engineer, modify, sublicense, distribute the software or use the software for any unauthorized purpose or in contravention of any law or regulation.

Warranty Disclaimer

PHILIPS MAKES NO REPRESENTATION OR WARRANTY, EXPRESS OR IMPLIED, THAT THE DEVICE WILL MEET YOUR REQUIREMENTS OR THAT THE USE OF THE DEVICE WILL BE UNINTERRUPTED, TIMELY, SECURE OR FREE FROM ERRORS. PHILIPS MAKES NO WARRANTY AS TO THE CONTENT CARRIED IN ANY STREAM. PHILIPS MAKES NO REPRESENTATION OR WARRANTY, EXPRESS OR IMPLIED, AS TO THE INFORMATION OR CONTENT ACCESSED THROUGH YOUR DEVICE OR TO YOUR RELIANCE ON, OR USE OF, ANY INFORMATION OR CONTENT ACCESSED THROUGH YOUR DEVICE. SPECIFIC WARRANTIES WERE PROVIDED WITH YOUR PURCHASE OF YOUR DEVICE AND THOSE WARRANTIES, INCLUDING ANY DISCLAIMERS TO THOSE WARRANTIES, CONTINUE TO APPLY. Because some jurisdictions do not permit the disclaimer of implied warranties, such disclaimers may not apply to you.

Limitation of Liability
PHILIPS WILL NOT BE LIABLE TO YOU OR TO ANY OTHER PARTY FOR ANY INDIRECT, INCIDENTAL, PUNITIVE, SPECIAL OR CONSEQUENTIAL DAMAGES (INCLUDING LOST PROFITS OR LOST SAVINGS) OR FOR LOSS OF DATA OR BUSINESS INTERRUPTION ARISING OUT OF OR RELATING TO YOUR USE OF THE DEVICE WHETHER OR NOT SUCH DAMAGES ARE BASED ON TORT, WARRANTY, CONTRACT OR ANY OTHER LEGAL THEORY - EVEN IF PHILIPS HAS BEEN ADVISED, OR IS AWARE, OF THE POSSIBILITY OF SUCH DAMAGES. IN NO EVENT WILL PHILIPS CUMULATIVE LIABILITY FOR DAMAGE (FROM ANY CAUSE WHATSOEVER) EXCEED THE AMOUNT YOU PAID FOR YOUR DEVICE.

Miscellaneous
"This agreement will be governed by the laws of England and Wales and you hereby consent to the non-exclusive jurisdiction of courts of London, England. If any provision of this agreement is invalid or unenforceable under applicable law, such provision will be deemed modified to the extent necessary to render such provision valid and enforceable and the other provisions of this agreement will remain in full force and effect. These Terms and Conditions of Use will not be governed by the United Nations Convention of Contracts for the International Sale of Goods, the application of which is hereby expressly waived."
BY REGISTERING YOUR PRODUCT , YOU REPRESENT THAT YOU HAVE READ AND UNDERSTOOD THESE TERMS AND CONDITIONS OF USE AND THAT YOU ACCEPT THEM.

SPANISH
Internet-enabled Device terms and conditions

Terms and Conditions of Use of your Philips Internet-enabled Device
Congratulations on your purchase of a Philips Internet-enabled Device ("Device"). In order to activate certain features on your Device relating to the streaming of content you must register your Device and agree to these Terms and Conditions of Use. Your act of registration constitutes your agreement to be bound by these Terms and Conditions of Use and will enable you to access these features. If you do not agree to these Terms and Conditions of Use, you may return your Device to the point of purchase. These Terms and Conditions of Use supplement, and do not replace, any terms, conditions or disclaimers which were provided with your purchase of the Device. All such terms, conditions and disclaimers remain in full force and effect.

Eligibility for Registration.
You must be at least 14 years of age to assume the responsibilities of these Terms and Conditions of Use. If you are under 14 years of age, you may not register unless one of your parents or legal guardians assumes the responsibilities of these Terms and Conditions of Use. Your act of registering constitutes your representation that you are either 14 years of age or, if you are under 14 years of age, that your parent or legal guardian has assumed the responsibilities of these Terms and Conditions of Use.

Restrictions on Modification of your Device

Your Device provides access to certain streams of content. As a condition of obtaining access to those streams through the Device, you agree not to tamper with or otherwise modify or attempt to modify the Device in any way (including through the use of software or by making physical alterations to the Device). You agree that you will not circumvent or attempt to circumvent technological measures employed to control access to, or the rights in, any content. You agree that you will not circumvent or attempt to circumvent any copy management system by any means. You agree that you will not decipher or attempt to decipher cryptographic keys or otherwise defeat or attempt to defeat any security features implemented in the Device or in the content streams. You agree that you will not use the Device for any unauthorized purpose or in contravention of any law or regulation.

Disclaimers Regarding Content

The streams of content which are accessible through your Device are not controlled or programmed by Philips. Rather, they are provided by third parties. Think of your Device (in addition to its other features) as a form of "tuner" which allows you to receive the content broadcast by many others outside of your local area. Since the content is provided by others, PHILIPS HAS NO EDITORIAL CONTROL OVER ANY OF THAT CONTENT RECEIVED THROUGH YOUR DEVICE AND, THEREFORE IS NOT LIABLE FOR CONTENT OR ITS NATURE OR DELIVERY. PHILIPS DOES NOT ENDORSE ANY OPINIONS EXPRESSED IN ANY CONTENT RECEIVED THROUGH YOUR DEVICE. PHILIPS DOES NOT GUARANTEE THE TRUTHFULNESS, ACCURACY, RELIABILITY, COMPLETENESS OR TIMELINESS OF CONTENT. YOU AGREE THAT ANY RELIANCE ON CONTENT IS AT YOUR OWN RISK.

Limitations on Access to Streams.

Philips does not guarantee access to any particular stream or to the content contained in any stream. Philips may, in its discretion, add or remove access to any specific stream or content at any time. Some streams are accessible through arrangements with online service providers which determine which streams are listed on their directories. Although Philips will strive to provide a good selection of online service providers, Philips does not guarantee continued access to any specific online service provider. Philips may, in its discretion, add or remove access to any specific online service provider.

Rights in Content

Content may be protected by copyright laws or other intellectual property or proprietary laws. In some situations, such as use of the Device in a commercial environment, it may be necessary for you to obtain, at your own risk, a license or other authorization to use such content. You agree that, in the event such a license or authorization is necessary, it is your responsibility to obtain any such license or authorization. You agree that you are solely liable for any damages you may incur resulting from your failure to obtain the proper license or authorization for use of the content accessible through the Device. You agree that Philips will have no liability to you with regard to your use of the content.

Changes in Features

Philips may, in its discretion, change the features of the Device, including adding features to, or removing features from, the Device. Some new features may require changes to these Terms and Conditions of Use. Your use of those new features will constitute your agreement to the revised Terms and Conditions of Use.

Software and Intellectual Property Rights

You may need to use certain software programs to use or have full access to certain features of the Device. You received certain software with the purchase of the Device and may receive other software from time to time in the future. Most of that software is contained in the Device and is not accessible to you. Some of that software is owned by Philips and some is owned by others. Your use of software owned by Philips is subject to these Terms and Conditions of Use and any applicable license agreement. Your use of software owned by others is governed by their applicable license agreements. Your use of software does not transfer any title or ownership rights in the software to you. Philips retains all its rights in software and other intellectual property, including copyrights, patent rights, and rights in its trademarks and trade names. You agree that you will not disassemble, decompile, create derivative works of, reverse engineer, modify, sublicense, distribute the software or use the software for any unauthorized purpose or in contravention of any law or regulation.

Warranty Disclaimer

PHILIPS MAKES NO REPRESENTATION OR WARRANTY, EXPRESS OR IMPLIED, THAT THE DEVICE WILL MEET YOUR REQUIREMENTS OR THAT THE USE OF THE DEVICE WILL BE UNINTERRUPTED, TIMELY, SECURE OR FREE FROM ERRORS. PHILIPS MAKES NO WARRANTY AS TO THE CONTENT CARRIED IN ANY STREAM. PHILIPS MAKES NO REPRESENTATION OR WARRANTY, EXPRESS OR IMPLIED, AS TO THE INFORMATION OR CONTENT ACCESSED THROUGH YOUR DEVICE OR TO YOUR RELIANCE ON, OR USE OF, ANY INFORMATION OR CONTENT ACCESSED THROUGH YOUR DEVICE. SPECIFIC WARRANTIES WERE PROVIDED WITH YOUR PURCHASE OF YOUR DEVICE AND THOSE WARRANTIES, INCLUDING ANY DISCLAIMERS TO THOSE WARRANTIES, CONTINUE TO APPLY. Because some jurisdictions do not permit the disclaimer of implied warranties, such disclaimers may not apply to you.

Limitation of Liability

PHILIPS WILL NOT BE LIABLE TO YOU OR TO ANY OTHER PARTY FOR ANY INDIRECT, INCIDENTAL, PUNITIVE, SPECIAL OR CONSEQUENTIAL DAMAGES (INCLUDING LOST PROFITS OR LOST SAVINGS) OR FOR LOSS OF DATA OR BUSINESS INTERRUPTION ARISING OUT OF OR RELATING TO YOUR USE OF THE DEVICE WHETHER OR NOT SUCH DAMAGES ARE BASED ON TORT, WARRANTY, CONTRACT OR ANY OTHER LEGAL THEORY - EVEN IF PHILIPS HAS BEEN ADVISED, OR IS AWARE, OF THE POSSIBILITY OF SUCH DAMAGES. IN NO EVENT WILL PHILIPS CUMULATIVE LIABILITY FOR DAMAGE (FROM ANY CAUSE WHATSOEVER) EXCEED THE AMOUNT YOU PAID FOR YOUR DEVICE.

Miscellaneous

"This agreement will be governed by the laws of England and Wales and you hereby consent to the non-exclusive jurisdiction of courts of London, England. If any provision of this agreement is invalid or unenforceable under applicable law, such provision will be deemed modified to the extent necessary to render such provision valid and enforceable and the other provisions of this agreement will remain in full force and effect. These Terms and Conditions of Use will not be governed by the United Nations Convention of Contracts for the International Sale of Goods, the application of which is hereby expressly waived."

BY REGISTERING YOUR PRODUCT, YOU REPRESENT THAT YOU HAVE READ AND UNDERSTOOD THESE TERMS AND CONDITIONS OF USE AND THAT YOU ACCEPT THEM.

ITALIAN

Termini e condizioni per i dispositivi abilitati alla navigazione Internet

Termini e condizioni di utilizzo del tuo dispositivo abilitato alla navigazione Internet

Congratulazioni per l'acquisto di un dispositivo abilitato alla navigazione Internet ("Dispositivo"). Termini e condizioni per i dispositivi abilitati alla navigazione Internet

Termini e condizioni di utilizzo del tuo dispositivo abilitato alla navigazione Internet

Congratulazioni per l'acquisto di un dispositivo abilitato alla navigazione Internet ("Dispositivo"). Per attivare alcune funzioni dell'Apparecchiatura correlate allo streaming di contenuti, è necessario registrare l'Apparecchiatura stesso e accettare i presenti Termini e condizioni di utilizzo. L'atto di registrazione equivale all'accettazione dei presenti Termini e condizioni di utilizzo e consente l'accesso alle funzioni. In caso di mancata accettazione dei presenti Termini e condizioni di utilizzo, si dovrà provvedere alla restituzione dell'Apparecchiatura al punto d'acquisto. I presenti Termini e condizioni di utilizzo non sostituiscono alcun altro termine, condizione ed esenzione di responsabilità rilasciati al momento dell'acquisto dell'Apparecchiatura. Tutti detti termini, condizioni ed esenzioni di responsabilità rimangono pertanto integralmente validi e applicabili.

Requisiti per la registrazione

Devi avere 14 anni per assumerti le responsabilità dei presenti Termini e condizioni per l'uso. Sei hai meno di 14 anni, non puoi effettuare la registrazione a meno che uno dei tuoi genitori, o uno dei tutori, non si assuma le responsabilità dei presenti Termini e condizioni per l'uso. L'atto di registrazione costituisce una dichiarazione di fatto che hai compiuto il 14° anno di età o, se hai meno di 14 anni, che uno dei tuoi genitori, o tutori, si è assunto le responsabilità dei presenti Termini e condizioni per l'uso.

Limitazioni alle modifiche dell'Apparecchiatura

L'Apparecchiatura consente l'accesso ad alcuni contenuti in streaming. Al fine di ottenere l'accesso a detti contenuti in streaming tramite l'Apparecchiatura, l'acquirente acconsente a non alterare né modificare o tentare di modificare l'Apparecchiatura stesso in alcun modo (incluso l'utilizzo di software e mediante modifiche fisiche). L'acquirente acconsente inoltre a non eludere né tentare di eludere le misure tecniche esistenti per controllare l'accesso o proteggere i diritti sui contenuti. L'acquirente acconsente a non eludere né tentare di eludere in alcun modo qualunque sistema di gestione delle copie. L'acquirente acconsente a non decifrare né tentare di decifrare le chiavi di crittografia, nonché a non disattivare né tentare di disattivare le funzioni di protezione esistenti nell'apparecchiatura o nei contenuti in streaming. L'acquirente acconsente a non utilizzare l'Apparecchiatura per scopi non autorizzati e a non violare alcuna legge o regolamento.

Esonero di responsabilità riguardo ai contenuti

I contenuti in streaming accessibili tramite l'Apparecchiatura non sono controllati né programmati da Philips. Vengono invece forniti da terze parti. L'Apparecchiatura (oltre alle altre funzioni di cui è dotato) deve essere considerato come un "sintonizzatore", che consente di ricevere contenuti trasmessi da numerosi soggetti al di fuori dell'area locale. Poiché i contenuti vengono forniti da terze parti, PHILIPS NON ESERCITA ALCUN CONTROLLO EDITORIALE SU DETTI CONTENUTI RICEVUTI TRAMITE L'APPARECCHIATURA E QUINDI NON POTRÀ ESSERE CONSIDERATA RESPONSABILE DEGLI STESSI O DELLA NATURA DELLA TRASMISSIONE. PHILIPS NON AVALLA ALCUNA OPINIONE ESPRESSA NEI CONTENUTI RICEVUTI TRAMITE L'APPARECCHIATURA. PHILIPS NON GARANTISCE LA VERIDICITÀ, L'ACCURATEZZA, L'AFFIDABILITÀ, LA COMPLETEZZA E

LA TEMPESTIVITÀ DEI CONTENUTI. L'ACQUIRENTE DICHIARA CHE FARÀ AFFIDAMENTO SUI CONTENUTI INTERAMENTE A PROPRIO RISCHIO.

Limitazioni all'accesso agli stream

Philips non garantisce l'accesso ad alcuno stream specifico né a contenuti di qualsiasi stream. Philips si riserva il diritto di impedire l'accesso, a propria discrezione, a stream o a contenuti specifici in qualsiasi momento. Alcuni stream sono accessibili tramite contratti con provider di servizi online, che stabiliscono quali stream includere nei propri elenchi. Ciò nonostante Philips attuerà tutti gli sforzi necessari per fornire una buona scelta di provider di servizi online, pur non garantendo l'accesso permanente ad alcun specifico provider di servizi online. Philips si riserva il diritto di impedire l'accesso, a propria discrezione, a specifici provider di servizi online.

Diritti nei contenuti

I contenuti possono essere protetti da leggi sul copyright o altre proprietà intellettuali, nonché da leggi sulla proprietà. In alcune situazioni, quali ad esempio l'utilizzo dell'Apparecchiatura in ambienti commerciali, potrebbe essere necessario ottenere una licenza o altro tipo di autorizzazione all'utilizzo dei contenuti. L'acquirente acconsente ad assumersi la responsabilità di ottenere dette licenze o autorizzazioni, nel caso in cui esse siano necessarie. L'acquirente acconsente a farsi interamente carico delle responsabilità per danni che possano insorgere dalla mancata acquisizione di apposite licenze o autorizzazioni di utilizzo dei contenuti accessibili tramite l'Apparecchiatura. L'acquirente acconsente a sollevare Philips da qualsiasi responsabilità in merito ai contenuti.

Modifica delle funzioni

Philips si riserva il diritto, a propria discrezione, di modificare le funzioni dell'Apparecchiatura, compreso quello di aggiungere o eliminare funzioni. Alcune nuove funzioni potrebbero richiedere la modifica dei presenti Termini e condizioni di utilizzo. L'utilizzo di dette nuove funzioni determinerà l'accettazione dei Termini e condizioni di utilizzo modificati.

Diritti su software e proprietà intellettuali

Per utilizzare e accedere ad alcune funzioni dell'Apparecchiatura è necessario utilizzare alcuni programmi software. Al momento dell'acquisto dell'Apparecchiatura, vengono consegnati alcuni programmi software e in futuro l'acquirente ne potrebbe ricevere altri. La maggior parte di detti programmi software risiede all'interno dell'Apparecchiatura e non è accessibile. Alcuni programmi software sono proprietà di Philips, altri sono invece di proprietà di terzi. L'utilizzo dei programmi software di proprietà di Philips è soggetto ai presenti Termini e condizioni di utilizzo e ad eventuali contratti di licenza applicabili. L'utilizzo di programmi software di proprietà di terzi è soggetto a eventuali contratti di licenza. L'utilizzo dei programmi software non costituisce trasferimento all'acquirente di titoli o diritti di proprietà del software. Philips conserva tutti i propri diritti sui programmi software e sulle altre proprietà intellettuali, compresi copyright, diritti di brevetto e diritti correlati a marchi e nomi commerciali. Si acconsente a non disassemblare, decompilare, creare opere derivate, destrutturare in alcun modo, modificare, sublicenziare, distribuire i programmi software o utilizzarli per scopi non autorizzati o in violazione a leggi o regolamenti.

Limitazione di responsabilità sulla garanzia
PHILIPS NON RILASCIA ALCUNA ATTESTAZIONE O GARANZIA, ESPLICITA O IMPLICITA, IN MERITO ALLA SODDISFAZIONE DELLE ESIGENZE DELL'ACQUIRENTE NÉ ALL'UTILIZZO CONTINUATIVO, TEMPESTIVO, PROTETTO E SENZA ERRORI DELL'APPARECCHIATURA. PHILIPS NON RILASCIA ALCUNA GARANZIA IN MERITO AI CONTENUTI TRASMESSI TRAMITE STREAMING. PHILIPS NON RILASCIA ALCUNA ATTESTAZIONE O GARANZIA, ESPLICITA O IMPLICITA, RIGUARDO ALLE INFORMAZIONI O AI CONTENUTI A CUI SI ACCEDE TRAMITE IL DISPOSITIVO, NÉ IN MERITO ALL'AFFIDABILITÀ O IMPIEGO DI INFORMAZIONI O CONTENUTI A CUI SI ACCEDE TRAMITE L'APPARECCHIATURA. LE GARANZIE SPECIFICHE SONO STATE RILASCIATE AL MOMENTO DELL'ACQUISTO DEL DISPOSITIVO E DETTE GARANZIE, COMPRESE LE LIMITAZIONI DI RESPONSABILITÀ DELLE STESSE, RESTANO VALIDE. Poiché alcune giurisdizioni non permettono la limitazione di responsabilità delle garanzie implicite, dette limitazioni potrebbero non essere applicabili nel caso specifico.

Limitazione della responsabilità
PHILIPS NON SARÀ DA RITENERSI RESPONSABILE VERSO L'ACQUIRENTE O TERZE PARTI IN CASO DI DANNI INDIRETTI, ACCIDENTALI, PUNITIVI, SPECIALI O CONSEQUENZIALI (INCLUSE FRA LE ALTRE LE PERDITE DI PROFITTO E RISPARMIO), NÉ DELLA PERDITA DI DATI O INTERRUZIONI DI ATTIVITÀ DERIVANTI O CORRELATE ALL'UTILIZZO DELL'APPARECCHIATURA, SIA CHE DETTI DANNI SIANO CONSEGUENZA DI ATTI ILLECITI, GARANZIE, CONTRATTI O ALTRI STRUMENTI LEGALI, ANCHE NEL CASO IN CUI PHILIPS SIA STATA INFORMATA O SIA A CONOSCENZA DELLA POSSIBILITÀ CHE TALI DANNI POSSANO VERIFICARSI. IN NESSUN CASO LA RESPONSABILITÀ CUMULATIVA DI PHILIPS PER DANNI (INDIPENDENTEMENTE DALLA CAUSA) POTRÀ ESSERE SUPERIORE ALLA SOMMA CORRISPOSTA PER L'APPARECCHIATURA.

Varie
"Il presente contratto è regolamentato dalle leggi della Repubblica Italiana con esclusione delle norme di diritto internazionale privato. Per qualsiasi controversia derivante dalle presenti condizioni contrattuali e/o ad esse connessa sarà competente in via esclusiva il foro di Milano. Se una qualsiasi disposizione del presente contratto risultasse non valida o non applicabile ai sensi delle leggi applicabili, detta disposizione dovrà ritenersi modificata nella misura necessaria a renderla valida e applicabile, mentre le altre disposizioni del contratto rimangono integralmente applicabili e valide. I presenti termini e condizioni di utilizzo non saranno regolamentati dalla Convenzione delle Nazioni Unite sui contratti per la vendita internazionale di merci, alla cui applicazione si rinuncia espressamente."
REGISTRANDO IL PRODOTTO SI DICHIARA DI AVER LETTO, COMPRESO E ACCETTATO I PRESENTI TERMINI E CONDIZIONI DI UTILIZZO.

NETHERLANDS

Algemene voorwaarden voor apparaten met internetfunctie

Gebruiksvoorwaarden voor uw apparaat met internetfunctie

Gefeliciteerd met uw aankoop van een apparaat met internetfunctie ("Apparaat"). Om bepaalde streamingfuncties van het apparaat te kunnen gebruiken, dient u het apparaat te registreren en in te stemmen met deze algemene voorwaarden. Wanneer u zich registreert bent u automatisch gebonden aan deze algemene voorwaarden en kunt u gebruikmaken van voornoemde streamingfuncties. Als u niet akkoord gaat met deze algemene voorwaarden, mag u het apparaat terugbrengen naar de plaats van aankoop. Deze algemene voorwaarden zijn aanvullend op de voorwaarden en uitsluitingen van aansprakelijkheid die u hebt ontvangen bij de aankoop van het apparaat. Zij vervangen deze niet. Alle eerder gestelde voorwaarden en uitsluitingen van aansprakelijkheid blijven onverminderd van kracht.

Registratiebevoegdheid

Om met de bepalingen en voorwaarden voor gebruik akkoord te kunnen gaan moet u 14 jaar of ouder zijn. Bent u jonger dan 14, dan mag u zich alleen registreren als een ouder of voogd akkoord gaat met de bepalingen en voorwaarden voor gebruik. Door u te registreren bevestigt u dat u 14 jaar of ouder bent, of dat, als u jonger bent dan 14, een ouder of voogd akkoord gaat met de bepalingen en voorwaarden voor gebruik.

Beperkingen op het wijzigen van het apparaat

Via dit apparaat krijgt u toegang tot bepaalde contentstromen. Om toegang te krijgen tot deze stromen, dient u ermee in te stemmen dat u het apparaat op geen enkele wijze zult wijzigen of zult proberen te wijzigen (onder andere door het gebruik van bepaalde software of fysieke wijzigingen aan het apparaat). U stemt ermee in dat u geen pogingen zult ondernemen om de technologie die de toegang tot bepaalde content regelt, te omzeilen. U stemt ermee in dat u geen pogingen zult ondernemen om kopieerbeveiligingen te omzeilen. U stemt ermee in dat u geen pogingen zult ondernemen om de cryptografische sleutels of andere beveiligingsfuncties van het apparaat of de contentstromen te omzeilen. U stemt ermee in dat u het apparaat niet zult gebruiken voor doeleinden waarvoor u niet gemachtigd bent of als u daarmee geldende wetten of regels overtreedt.

Uitsluitingen van aansprakelijkheid inzake content

De contentstromen waartoe u toegang hebt via het apparaat worden niet gecontroleerd of beheerd door Philips. Zij worden ter beschikking gesteld door derde partijen. Het apparaat is in feite een soort "tuner" waarmee u de content kunt ontvangen die wordt uitgezonden buiten uw onmiddellijke omgeving. Aangezien de content ter beschikking wordt gesteld door derden, HEEFT PHILIPS GEEN REDACTIONELE CONTROLE OVER DE CONTENT DIE U VIA UW APPARAAT BINNENHAALT EN KAN PHILIPS BIJGEVOLG NIET AANSPRAKELIJK WORDEN GESTELD VOOR DE INHOUD ERVAN OF DE AFLEVERING. PHILIPS ONDERSCHRIJFT GEEN ENKELE MENING DIE WORDT GEUIT IN DE CONTENT DIE U ONTVANGT VIA HET APPARAAT. PHILIPS VERLEENT GEEN ENKELE GARANTIE VOOR DE JUISTHEID, BETROUWBAARHEID, NAUWKEURIGHEID, VOLLEDIGHEID OF DE TIJDIGHEID VAN DE CONTENT. U STEMT ERMEE IN DAT U OP EIGEN RISICO VERTROUWT OP DE INHOUD VAN DE CONTENT.

Beperkingen op de toegang tot contentstromen

Philips garandeert geen toegang tot een bepaalde contentstroom of tot de content in een bepaalde stroom. Philips mag op elk moment naar goeddunken de toegang tot een bepaalde stroom of content aanbieden of stopzetten. Sommige stromen zijn toegankelijk door overeenkomsten met internetaanbieders. Zij bepalen welke stromen beschikbaar zijn in hun directory's. Philips doet er alles aan om een goede selectie van internetaanbieders aan te bieden. Philips kan echter niet garanderen dat de toegang tot een bepaalde internetaanbieder continu beschikbaar is. Philips mag naar goeddunken de toegang tot een bepaalde internetaanbieder aanbieden of stopzetten.

De rechten op content

Content is mogelijk beschermd door copyrightrechten of andere intellectuele eigendomsrechten. Onder bepaalde omstandigheden, als u het apparaat bijvoorbeeld gebruikt voor commerciële doeleinden, dient u mogelijk een licentie aan te schaffen of toestemming te verkrijgen om de content te kunnen gebruiken. U stemt ermee in dat als een licentie of toestemming vereist is, het uw verantwoordelijkheid is deze te verkrijgen. U stemt ermee in dat alle schade die u lijdt als gevolg van het niet aanschaffen of verkrijgen van de vereiste licentie of toestemming voor gebruik van de content die u via het apparaat verwerft, voor uw rekening is. U stemt ermee in dat Philips niet aansprakelijk kan worden gesteld inzake de content.

Functiewijzigingen

Philips mag naar goeddunken de functies van het apparaat wijzigen en mag functies toevoegen of verwijderen. Voor sommige nieuwe functies dienen deze algemene voorwaarden mogelijk worden aangepast. Als u de nieuwe functies gebruikt, stemt u automatisch in met de herziene algemene voorwaarden.

Software en intellectuele eigendomsrechten

Mogelijk hebt u softwareprogramma's nodig om bepaalde functies van het apparaat (volledig) te kunnen gebruiken. Ten tijde van de aankoop hebt u bepaalde software ontvangen en mogelijk ontvangt u van tijd tot tijd nog andere software. De meeste van deze software zit in het apparaat. U hebt geen toegang tot deze software. Sommige software is het eigendom van Philips, andere is het eigendom van derden. Het gebruik van de software van Philips is onderworpen aan deze algemene voorwaarden en de geldende licentie-overeenkomsten. Het gebruik van software van derden is onderworpen aan de geldende licentie-overeenkomsten. Het gebruik van de software betekent niet dat u eigenaar wordt van de software. Philips behoudt de volledige rechten op de software en alle overige intellectuele eigendom, waaronder copyrights, patentrechten en rechten op zijn handelsmerken en handelsnamen. U stemt ermee in geen afgeleide producten te maken van de software en de software niet aan reverse-engineering te onderwerpen, niet te disassembleren, te decompileren, te wijzigen, in sublicentie te geven, te distribueren of voor niet-geautoriseerde doeleinden aan te wenden of in overtreding van een wet of regel.

Uitsluiting van garantie

PHILIPS VERLEENT GEEN ENKELE GARANTIE, EXPLICIET NOCH IMPLICIET, DAT HET APPARAAT BEANTWOORDT AAN UW VEREISTEN OF DAT U HET APPARAAT ONONDERBROKEN, TIJDIG, BETROUWBAAR EN FOUTLOOS KUNT GEBRUIKEN. PHILIPS VERLEENT GEEN ENKELE GARANTIE OVER DE CONTENT IN EEN STROOM. PHILIPS VERLEENT GEEN ENKELE GARANTIE, EXPLICIET NOCH IMPLICIET, OVER DE INFORMATIE OF DE CONTENT DIE U

VERKRIJGT VIA HET APPARAAT, OF OVER UW VERTROUWEN IN OF GEBRUIK VAN INFORMATIE OF CONTENT WAARTOE U TOEGANG HEBT VIA HET APPARAAT. ER ZIJN U SPECIFIEKE GARANTIES VERLEEND TEN TIJDE VAN DE AANKOOP VAN HET APPARAAT EN DIE GARANTIES, WAARONDER UITSLUITINGEN VAN DIE GARANTIES, BLIJVEN ONVERMINDERD GELDIG. Omdat het in sommige rechtsgebieden niet is toegestaan geïmpliceerde garanties uit te sluiten, gelden deze uitsluitingen mogelijk niet voor u.

Beperking van aansprakelijkheid
PHILIPS KAN NIET DOOR U OF EEN DERDE PARTIJ VERANTWOORDELIJK WORDEN GESTELD VOOR INDIRECTE, INCIDENTELE, SPECIALE OF GEVOLGSCHADE (WAARONDER WINSTDERVING OF GEMISTE BESPARINGEN), VERLIES VAN GEGEVENS OF ONDERBREKING VAN DE BEDRIJFSVOERING VOORTVLOEIEND UIT OF VERBAND HOUDEND MET HET GEBRUIK VAN HET APPARAAT, ONGEACHT OF DEZE SCHADE HET RESULTAAT IS VAN EEN ONRECHTMATIGE DAAD, EEN GARANTIE, EEN CONTRACT OF EEN ANDERE WETTELIJKE THEORIE, ZELFS ALS PHILIPS OP DE HOOGTE WAS VAN DE MOGELIJKHEID VAN DERGELIJKE SCHADE. IN GEEN GEVAL ZAL DE VERGOEDING VOOR SCHADE DIE PHILIPS DIENT UIT TE BETALEN (ONGEACHT DE OORZAAK) MEER ZIJN DAN WAT U VOOR HET APPARAAT HEBT BETAALD.

Diversen
"Op deze overeenkomst Is Nederlands recht van toepassing. Ten aanzien van geschillen daaromtrent is de competente rechter in Nederland bevoegd.. . Als een bepaling van deze overeenkomst ongeldig of onafdwingbaar is onder een bepaalde wet, wordt aangenomen dat de bepaling in die mate gewijzigd is dat ze geldig en afdwingbaar wordt. De overige bepalingen van deze overeenkomst blijven onverminderd van kracht. Deze algemene voorwaarden vallen niet onder de conventie van de Verenigde Naties over de internationale verkoop van goederen. Er wordt expliciet afstand gedaan van de toepassing van deze conventie."
DOOR HET PRODUCT TE REGISTREREN, BEVESTIGT U DAT U DEZE ALGEMENE GEBRUIKSVOORWAARDEN HEBT GELEZEN EN BEGREPEN EN DAT U ERMEE INSTEMT.

GERMAN
Nutzungsbedingungen für internetfähige Geräte

Allgemeine Bedingungen für die Nutzung Ihres internetfähigen Geräts von Philips
Herzlichen Glückwunsch zum Kauf eines internetfähigen Geräts ("Gerät"). Zur Aktivierung bestimmter Funktionen für das Streamen von Daten an Ihrem Gerät müssen Sie das Gerät registrieren und den vorliegenden Allgemeinen Nutzungsbedingungen zustimmen. Mit der Produktregistrierung stimmen Sie diesen allgemeinen Bedingungen zu und haben anschließend Zugang zu diesen Funktionen. Wenn Sie mit den vorliegenden allgemeinen Nutzungsbedingungen nicht einverstanden sind, können Sie das Gerät dorthin zurückschicken, wo Sie es gekauft haben. Die vorliegenden Allgemeinen Nutzungsbedingungen treten nicht an die Stelle der Ihrem Kaufvertrag zugrunde liegenden Bedingungen, sondern ergänzend an ihre Seite. Die dem Kaufvertrag zugrunde liegenden Bedingungen bleiben weiterhin bestehen.

Registrierungsbedingungen
Sie müssen mindestens 14 Jahre alt sein, um die Verantwortung für diese Allgemeinen Nutzungsbedingungen übernehmen zu können. Sind Sie jünger als 14 Jahre, dürfen Sie sich nur dann registrieren, wenn ein Elternteil oder Erziehungsberechtigter die Verantwortung für die Allgemeinen Nutzungsbedingungen übernimmt. Mit der Registrierung bestätigen Sie, dass Sie mindestens 14 Jahre alt sind bzw. dass ein Elternteil oder Erziehungsberechtigter die Verantwortung für diese Allgemeinen Nutzungsbedingungen übernimmt.

Einschränkungen bei Änderungen am Gerät
Dieses Gerät bietet den Zugang zu bestimmten Datenstreams. Als Bedingung für den Zugang zu diesen Streams erklären Sie sich einverstanden, keinerlei unerlaubte oder sonstige Änderungen an diesem Gerät vorzunehmen (auch nicht durch Verwendung von Software oder durch Vornahme physischer Änderungen am Gerät). Sie erklären, dass Sie die zur Steuerung des Datenzugriffs oder der Rechte an diesen Daten vorgesehenen technischen Maßnahmen weder umgehen noch versuchsweise umgehen werden. Sie erklären, dass Sie das Kopiermanagementsystem unter keinen Umständen umgehen oder versuchsweise umgehen werden. Sie erklären, dass Sie weder die Verschlüsselungscodes entschlüsseln oder versuchsweise entschlüsseln noch die im Gerät oder in den Datenstreams implementierten Sicherheitsfunktionen umgehen oder versuchsweise umgehen werden. Sie erklären, dass Sie das Gerät nicht zu unerlaubten Zwecken, sondern nur unter Einhaltung der gesetzlichen Bestimmungen und Vorschriften verwenden werden.

Haftungsausschluss bezüglich der Daten
Die über dieses Gerät zugänglichen Datenstreams werden von Philips weder kontrolliert noch programmiert. Sie werden vielmehr von Dritten zur Verfügung gestellt. Ihr Gerät (neben den anderen gerätespezifischen Funktionen) ist vergleichbar mit einem „Tuner", mit dem Sie Daten empfangen können, die von vielen anderen außerhalb Ihres lokalen Bereichs übertragen werden. Da die Daten von Dritten zur Verfügung gestellt werden, HAT PHILIPS KEINE REDAKTIONELLE KONTROLLE ÜBER DIE VON IHREM GERÄT EMPFANGENEN DATEN UND HAFTET DAHER AUCH NICHT FÜR DEN DATENINHALT, DIE ART DIESER DATEN ODER DIE ÜBERTRAGUNG. DIE IN DEN ÜBER DIESES GERÄT EMPFANGENEN DATEN ZUM AUSDRUCK GEBRACHTEN MEINUNGEN WERDEN VON PHILIPS NICHT BEFÜRWORTET. PHILIPS ÜBERNIMMT KEINE GEWÄHR FÜR DIE WAHRHAFTIGKEIT, GENAUIGKEIT, ZUVERLÄSSIGKEIT, VOLLSTÄNDIGKEIT ODER AKTUALITÄT DER DATEN. SIE ERKLÄREN, DASS SIE DAS ALLEINIGE RISIKO FÜR DIE VERLÄSSLICHKEIT DER DATEN TRAGEN.

Beschränkungen hinsichtlich des Zugang zu Datenstreams
Philips übernimmt keine Gewähr für den Zugang zu einem bestimmten Stream oder die in einem Stream enthaltenen Daten. Nach alleinigem Ermessen darf Philips den Zugang zu einem bestimmten Stream oder zu bestimmten Daten jederzeit erweitern oder entfernen. Durch Vereinbarungen mit Online-Dienstanbietern, die festlegen, welche Streams in ihren Verzeichnissen aufgeführt sind, ist der Zugang zu einigen Streams möglich. Obwohl sich Philips nach besten Kräften um eine gute Auswahl an Online-Dienstanbietern bemühen wird, kann Philips keinen permanenten Zugang zu einem bestimmten Online-Dienstanbieter gewährleisten. Nach alleinigem Ermessen darf Philips den Zugang zu einem bestimmten Online-Dienstanbieter erweitern oder entfernen.

Rechte an Date

Daten können urheberrechtlich oder durch geistige Eigentumsrechte geschützt sein. In bestimmten Fällen, wie beispielsweise bei der Verwendung des Geräts in einer kommerziell genutzten Umgebung, müssen Sie unter Umständen eine Lizenz oder sonstige Genehmigung zur Verwendung dieser Daten beantragen bzw. einholen. Sollte solch eine Lizenz oder Genehmigung erforderlich sein, willigen Sie hiermit ein, dass Sie für die Einholung dieser Lizenz oder Genehmigung verantwortlich sind. Sie erklären, dass Sie allein für Schäden haften, die Ihnen durch die unterlassene Einholung der entsprechenden Lizenz oder Genehmigung zur Verwendung der Daten entstehen, die über dieses Gerät zugänglich sind. Sie willigen ein, dass Philips Ihnen gegenüber insoweit nicht haftet.

Änderungen an Funktionen

Nach alleinigem Ermessen darf Philips die Funktionen des Geräts ändern, einschließlich dem Hinzufügen neuer oder Entfernen vorhandener Gerätefunktionen. Bei manchen neuen Funktionen müssen die vorliegenden Allgemeinen Nutzungsbedingungen unter Umständen geändert werden. Mit der Nutzung dieser neuen Funktionen erklären Sie auch Ihr Einverständnis mit den jeweils geänderten Allgemeinen Nutzungsbedingungen.

Rechte an Software und geistigem Eigentum

Für die Verwendung bzw. den uneingeschränkten Zugang zu bestimmten Gerätefunktionen benötigen Sie unter Umständen bestimmte Softwareprogramme. Mit dem Kauf dieses Geräts haben Sie eine bestimmte Software erworben, wobei Sie auch zukünftig von Zeit zu Zeit andere Softwareprogramme erhalten werden. Diese Software ist größtenteils im Gerät integriert und für Sie nicht zugänglich. Diese Software steht teilweise im Eigentum von Philips und teilweise im Eigentum Dritter. Ihre Nutzung der im Eigentum von Philips befindlichen Software unterliegt den vorliegenden Allgemeinen Nutzungsbedingungen und dem jeweils gültigen Lizenzvertrag. Die Nutzung der im Eigentum Dritter befindlichen Software unterliegt dem jeweils gültigen Lizenzvertrag. Durch die Nutzung der Software werden keine Eigentumsrechte an ihr erworben. Philips behält sich sämtliche Rechte an der Software und sonstige Eigentumsrechte vor, einschließlich Urheber-, Patent- und Markenrechten. Sie erklären, dass Sie die Software nicht zu unerlaubten Zwecken disassemblieren, dekompilieren, zurückentwickeln, ändern, im Wege einer Unterlizenz weiterleiten, verteilen oder verwenden bzw. abgeleitete Versionen dieser Software erstellen werden und stets alle gesetzlichen Vorschriften und Bestimmungen einhalten.

Gewährleistungsausschluss

PHILIPS GEWÄHRLEISTET NICHT, DASS DAS GERÄT IHREN ANFORDERUNGEN ENTSPRICHT. PHILIPS ÜBERNIMMT ZUDEM KEINE GEWÄHRLEISTUNG IN BEZUG AUF DIE IN EINEM STREAM ENTHALTENEN DATEN. PHILIPS ÜBERNIMMT WEITERHIN KEINE GEWÄHRLEISTUNG IN BEZUG AUF DIE ÜBER IHR GERÄT ZUGÄNGLICHEN INFORMATIONEN ODER DATEN ODER IN BEZUG AUF IHRE NUTZUNG DER ÜBER DIESES GERÄT ZUGÄNGLICHEN INFORMATIONEN ODER DATEN. HIERVON UNBERÜHRT BLEIBEN IHRE ANSPRÜCHE UND RECHTE AUS DEN DEM KAUF ZUGRUNDE LIEGENDEN VEREINBARUNGEN. INSBESONDERE BLEIBEN IHRE ANSPRÜCHE UND RECHTE, DIE IHNEN ALS VERBRAUCHER IM FALLE DES ERWERBS EINER MANGELBEHAFTETEN KAUFSACHE KRAFT GESETZES ZWINGEND ZUSTEHEN, UNBERÜHRT (VERBRAUCHSGÜTER- KAUF).

Allgemeiner Haftungsausschluss

PHILIPS' HAFTUNG FÜR SCHADENSERSATZ, GLEICH AUF WELCHEM RECHTSGRUND BERUHEND, IST AUSGESCHLOSSEN. DIES GILT INSBESONDERE FÜR ENTGANGENE GEWINNE, DATENVERLUSTE ODER BETRIEBSUNTERBECHUNGEN, DIE DURCH ODER IM ZUSAMMENHANG MIT DER VERWENDUNG DES GERÄTS ENTSTEHEN. DER HAFTUNGSAUSSCHLUSS FINDET KEINE ANWENDUNG, SOWEIT GESETZLICH EIN AUSSCHLUSS DER HAFTUNG UNZULÄSSIG IST. DIES GILT INSBESONDERE FÜR EINE VERLETZUNG DES LEBENS, DES KÖRPERS, DER GESUNDHEIT UND BEI GROBEN VERSCHULDEN. DER HAFTUNGS- AUSSCHLUSS FINDET WEITERHIN KEINE ANWENDUNG, SOWEIT PHILIPS ALS HERSTELLER DES GERÄTES AUS DEM PRODUKTHAFTUNGSGESETZ VERPFLICHTET IST.

Sonstiges

Diese Vereinbarung unterliegt dem Recht der Bundesrepublik Deutschland unter Ausschluss des Übereinkommens der Vereinten Nationen über Verträge über den internationalen Warenkauf (CISG). Gerichtsstand ist Hamburg. Soweit der Vertragspartner nicht Kaufmann, juristische Person des öffentlichen Rechts oder öffentlich-rechtliches Sondervermögen ist, bestimmt sich der Gerichtsstand nach den gesetzlichen Vorschriften. Sollte eine Bestimmung dieser Vereinbarung ungültig sein, so ist sie durch eine gültige zu ersetzen. Die übrigen Bestimmungen dieses Vertrages bleiben davon unberührt und weiterhin gültig.
DURCH DIE REGISTRIERUNG IHRES PRODUKTS ERKLÄREN SIE, DASS SIE DIE VORLIEGENDEN ALLGEMEINEN NUTZUNGSBEDINGUNGEN GELESEN, VERSTANDEN HABEN UND SICH MIT IHNEN EINVERSTANDEN ERKLÄRT HABEN.

FRENCH

Conditions générales pour les appareils équipés de l'accès à Internet

Conditions générales d'utilisation de votre appareil équipé de l'accès à Internet

Félicitations pour l'achat de votre appareil équipé de l'accès à Internet (« Appareil »). Félicitations ! Pour activer certaines fonctionnalités de diffusion de contenu sur cet appareil, vous devez l'enregistrer et en accepter les conditions d'utilisation. L'enregistrement de l'appareil tient lieu d'accord, vous lie aux présentes conditions d'utilisation et vous donne accès à ces fonctionnalités. Si vous n'acceptez pas ces conditions d'utilisation, vous pouvez retourner l'appareil au point de vente. Les présentes conditions d'utilisation complètent, sans les remplacer, toutes les conditions ou clauses de non-responsabilité accompagnant l'appareil à l'achat. Ces conditions et clauses conservent leur force exécutoire.

Conditions requises pour l'enregistrement

Vous avez 14 ans au moins d'assumez la responsabilité de cette conditions d'usage. Si vous avez moins que 14 ans, vous n'avez pas le droit de vous enregistrez á moins que vos parents ou vos gardiens légitimes assume la responsabilité de cette conditions d'usage. Votre enregistrement représente que vous êtes 14 ans ou, si vous êtes moins que 14 ans, que votre parents ou votre gardiens légitime on assumez la responsabilité de cette conditions d'usage.

Restrictions relatives à la modification de l'appareil

L'appareil donne accès à des flux de contenu. Afin de pouvoir accéder à ces flux de contenu via l'appareil, vous vous engagez à ne pas falsifier, modifier ou tenter de modifier l'appareil d'aucune manière que ce soit (y compris par l'utilisation d'un logiciel ou la dégradation physique de l'appareil). Vous acceptez de ne pas contourner ou tenter de contourner les procédés technologiques utilisés pour contrôler l'accès ou les droits d'accès aux contenus. Vous consentez à ne pas entraver ou tenter d'entraver le fonctionnement des systèmes de gestion de copie, par quelque moyen que ce soit. Vous vous engagez à ne pas déchiffrer ou tenter de déchiffrer les clés de chiffrement et à ne pas déjouer ou tenter de déjouer les fonctions de sécurité de l'appareil ou des flux de contenu. Vous acceptez de ne pas utiliser l'appareil à des fins non autorisées ou contraires aux lois et réglementations en vigueur.

Non-responsabilité par rapport au contenu

Les flux de contenu accessibles via l'appareil ne sont ni contrôlés ni programmés par Philips. Ils sont fournis par des tiers. Outre ses autres fonctionnalités, l'appareil fait office de « tuner », ce qui vous permet de recevoir du contenu diffusé par de nombreux tiers situés hors de votre zone locale. Étant donné que le contenu est fourni par des tiers, LA SOCIÉTÉ PHILIPS N'A AUCUN CONTRÔLE RÉDACTIONNEL SUR LE CONTENU REÇU AU MOYEN DE L'APPAREIL ET, PAR CONSÉQUENT, N'EST PAS RESPONSABLE DU CONTENU, DE LA NATURE DU CONTENU OU DE SA DIFFUSION. PHILIPS NE SOUTIENT EN AUCUNE FAÇON LES OPINIONS EXPRIMÉES DANS LES CONTENUS REÇUS VIA L'APPAREIL, QUELS QU'ILS SOIENT. PHILIPS NE GARANTIT PAS LA VÉRACITÉ, L'EXACTITUDE, LA FIABILITÉ, LA COMPLÉTUDE OU L'À-PROPOS DU CONTENU. VOUS ACCEPTEZ QUE LA CONFIANCE ACCORDÉE AU CONTENU RELÈVE DE VOTRE RESPONSABILITÉ.

Limitations d'accès aux flux de contenu

Philips ne garantit en aucun cas l'accès à un flux de contenu particulier ni au contenu d'un flux particulier. Philips se réserve le droit d'autoriser ou d'interdire à tout moment l'accès à un flux de contenu ou à un contenu spécifique. Certains flux de contenu sont accessibles suite à des accords conclus avec des fournisseurs de services en ligne, qui déterminent les flux figurant dans leurs répertoires. Bien que Philips s'efforce de proposer un large choix de fournisseurs de services en ligne, elle ne garantit pas un accès continu à tous ces fournisseurs. Philips se réserve le droit d'autoriser ou d'interdire l'accès à un fournisseur de services en ligne particulier.

Droits relatifs au contenu

Il est possible que le contenu soit protégé par des lois sur les droits d'auteur ou par d'autres lois relatives à la propriété ou à la propriété intellectuelle. Dans certaines situations, comme l'utilisation de l'appareil à des fins commerciales, il est possible que vous deviez obtenir une licence ou autre autorisation pour utiliser de tels contenus. Vous acceptez que, dans le cas où une telle licence ou autorisation est requise, il est de votre responsabilité de l'obtenir. Vous acceptez d'être tenu responsable de tout dommage résultant de la non-obtention de la licence ou autorisation nécessaire en vue de l'utilisation du contenu accessible via l'appareil. Vous reconnaissez que Philips décline toute responsabilité en ce qui concerne le contenu.

Modification des fonctionnalités

Philips se réserve le droit de modifier les fonctionnalités de l'appareil, notamment d'en ajouter ou d'en supprimer. L'ajout de nouvelles fonctionnalités peut entraîner une modification des présentes conditions d'utilisation. L'utilisation de ces nouvelles fonctionnalités tient lieu d'acceptation des conditions d'utilisation révisées.

Droits relatifs aux logiciels et à la propriété intellectuelle

Il est possible que vous deviez recourir à certains logiciels pour pouvoir utiliser certaines fonctionnalités de l'appareil ou y accéder complètement. L'appareil est fourni avec certains logiciels et il est possible que vous en receviez d'autres à l'avenir. La plupart de ces logiciels sont intégrés à l'appareil et vous ne pouvez pas y accéder. Certains de ces logiciels sont la propriété de Philips et d'autres appartiennent à des tiers. L'utilisation des logiciels de Philips est soumise aux présentes conditions et à toute autre contrat de licence applicable. L'utilisation des logiciels appartenant à des tiers est soumise aux licences applicables. L'utilisation des logiciels ne vous confère en aucun cas des droits de propriété. Philips conserve tous les droits relatifs aux logiciels et à la propriété intellectuelle, y compris les droits d'auteur, les droits de brevet et les droits relatifs à ses marques et appellations commerciales. Vous vous engagez à ne pas vous livrer au désassemblage du logiciel, à sa décompilation, à la création de dérivés, à l'ingénierie inverse, à sa modification, à sa distribution et à ne pas en accorder de sous-licence. Vous consentez également à ne pas l'utiliser à des fins non autorisées ou contraires aux lois et réglementations en vigueur.

Clause de non-responsabilité

PHILIPS EXCLUT TOUTE GARANTIE, EXPRESSE OU IMPLICITE, QUANT À VOTRE SATISFACTION PAR RAPPORT À L'APPAREIL ET QUANT À SON UTILISATION SANS INTERRUPTION, RÉGULIÈRE, FIABLE OU EXEMPTE D'ERREURS. PHILIPS NE DONNE AUCUNE GARANTIE QUANT AUX CONTENUS. PHILIPS EXCLUT TOUTE GARANTIE, EXPRESSE OU IMPLICITE, QUANT AUX INFORMATIONS OU CONTENUS AUXQUELS VOUS ACCÉDEZ VIA L'APPAREIL ET QUANT À LA CONFIANCE QUE VOUS LEUR ACCORDEZ OU L'UTILISATION QUE VOUS EN FAITES. LES GARANTIES SPÉCIFIQUES FOURNIES LORS DE L'ACHAT DE L'APPAREIL, Y COMPRIS LES CLAUSES DE NON-RESPONSABILITÉ, RESTENT D'APPLICATION. Étant donné que certaines juridictions n'autorisent pas la renonciation aux garanties implicites, il est possible que de telles clauses de non-responsabilité ne s'appliquent pas.

Limitation de responsabilité

PHILIPS NE POURRA ÊTRE TENUE RESPONSABLE DES DOMMAGES INDIRECTS, ACCESSOIRES, PUNITIFS OU SPÉCIAUX (Y COMPRIS LES PERTES DE PROFITS ET D'ÉCONOMIES), NI DE LA PERTE DE DONNÉES OU DE L'INTERRUPTION D'ACTIVITÉS COMMERCIALES DUE OU LIÉE À L'UTILISATION DE L'APPAREIL, QUE CES DOMMAGES SOIENT ISSUS OU NON D'UN ACTE DÉLICTUEL, D'UNE GARANTIE, D'UN CONTRAT OU DE TOUTE AUTRE THÉORIE LÉGALE, ET CE, MÊME SI PHILIPS A ÉTÉ NOTIFIÉE OU EST CONSCIENTE DE LA PROBABILITÉ DE TELS DOMMAGES. LA RESPONSABILITÉ CUMULÉE DE PHILIPS POUR DES DOMMAGES (QUELLE QU'EN SOIT LA CAUSE) N'EXCÈDERA EN AUCUN CAS LE MONTANT D'ACHAT DE VOTRE APPAREIL.

Divers

Cet accord est soumis à la législation de l'État de New York, régissant les accords entre les résidents de New York conclus au sein de l'état de New York. Par le présent accord, vous reconnaissez la compétence exclusive de la Cour d'État et de la Cour fédérale de l'État de New York. Si l'une des dispositions du présent accord n'est pas valide ou n'est pas applicable, elle sera jugée comme étant modifiée dans la mesure nécessaire pour la rendre valide et applicable. Les autres dispositions du présent accord conservent leur force exécutoire. Les présentes conditions d'utilisation ne sont pas régies par la Convention des Nations Unies sur les contrats de vente internationale de marchandises, le présent document renonçant expressément à son application.

PAR L'ENREGISTREMENT DE VOTRE PRODUIT, VOUS DÉCLAREZ AVOIR LU ET COMPRIS CES CONDITIONS D'UTILISATION ET LES ACCEPTER.

"By clicking 'upload,' you certify that you own all rights to the content or that you are authorized by the owner to make the content publicly available on YouTube, and that it otherwise complies with the YouTube Terms of Service located at http://www.youtube.com/t/terms."

```
/*          $FreeBSD: src/sys/crypto/md5.c,v 1.1.2.2 2001/07/03 11:01:27 ume Exp $          */
/*          $KAME: md5.c,v 1.5 2000/11/08 06:13:08 itojun Exp $      */
/*
* Copyright (C) 1995, 1996, 1997, and 1998 WIDE Project.
* All rights reserved.
*
* Redistribution and use in source and binary forms, with or without
* modification, are permitted provided that the following conditions
* are met:
* 1. Redistributions of source code must retain the above copyright
*    notice, this list of conditions and the following disclaimer.
* 2. Redistributions in binary form must reproduce the above copyright
*    notice, this list of conditions and the following disclaimer in the
*    documentation and/or other materials provided with the distribution.
* 3. Neither the name of the project nor the names of its contributors
*    may be used to endorse or promote products derived from this software
*    without specific prior written permission.
*
* THIS SOFTWARE IS PROVIDED BY THE PROJECT AND CONTRIBUTORS ``AS IS'' AND
* ANY EXPRESS OR IMPLIED WARRANTIES, INCLUDING, BUT NOT LIMITED TO, THE
* IMPLIED WARRANTIES OF MERCHANTABILITY AND FITNESS FOR A PARTICULAR PURPOSE
* ARE DISCLAIMED.  IN NO EVENT SHALL THE PROJECT OR CONTRIBUTORS BE LIABLE
* FOR ANY DIRECT, INDIRECT, INCIDENTAL, SPECIAL, EXEMPLARY, OR CONSEQUENTIAL
* DAMAGES (INCLUDING, BUT NOT LIMITED TO, PROCUREMENT OF SUBSTITUTE GOODS
* OR SERVICES; LOSS OF USE, DATA, OR PROFITS; OR BUSINESS INTERRUPTION)
* HOWEVER CAUSED AND ON ANY THEORY OF LIABILITY, WHETHER IN CONTRACT, STRICT
* LIABILITY, OR TORT (INCLUDING NEGLIGENCE OR OTHERWISE) ARISING IN ANY WAY
* OUT OF THE USE OF THIS SOFTWARE, EVEN IF ADVISED OF THE POSSIBILITY OF
* SUCH DAMAGE.
*/

/*-
*  COPYRIGHT (C) 1986 Gary S. Brown. You may use this program, or
*  code or tables extracted from it, as desired without restriction.
*/
http://www.freebsd.org/cgi/cvsweb.cgi/src/sys/libkern/crc32.c?rev=1.6.4.1.2.1;content-type=text%2Fplain
/*
* Copyright (c) 2004-2006 Intel Corporation - All Rights Reserved
*
*
* This software program is licensed subject to the BSD License, available at
* http://www.opensource.org/licenses/bsd-license.html.
```

```
*
* Abstract:
*
* Tables for software CRC generation
*/
```

http://iphome.hhi.de/suehring/tml/download/COPYRIGHT_ITU.txt
http://iphome.hhi.de/suehring/tml/download/COPYRIGHT_ISO_IEC.txt

Specifications are subject to change without notice
© 2012 Koninklijke Philips Electronics N.V.
All rights reserved.

CAM200_00_UM_V1.0