	DIMENSION A	DIMENSION B MIN	DIENSION B MAX	WEIGHT CAPACITY
WP21S/US	24.36 [618.8]	3.62 [92.0]	22.12 [561.9]	25 LBS
WP22S/US	40.36 [1025.2]	3.62 [92.0]	38.12 [968.3]	25 LBS
WP23S/US	56.36 [1431.6]	3.62 [92.0]	54.12 [1374.7]	25 LBS

STATUS: CT 09/15/2015 - RELEASED ON ECO: 500012471

TECH-000016

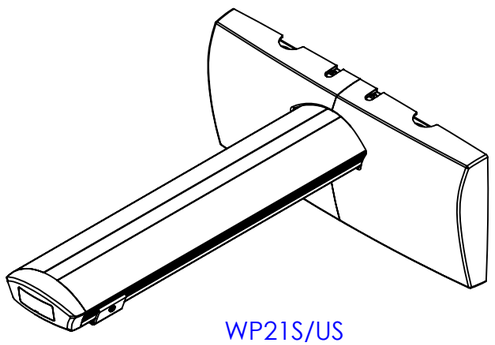

WP21S/US

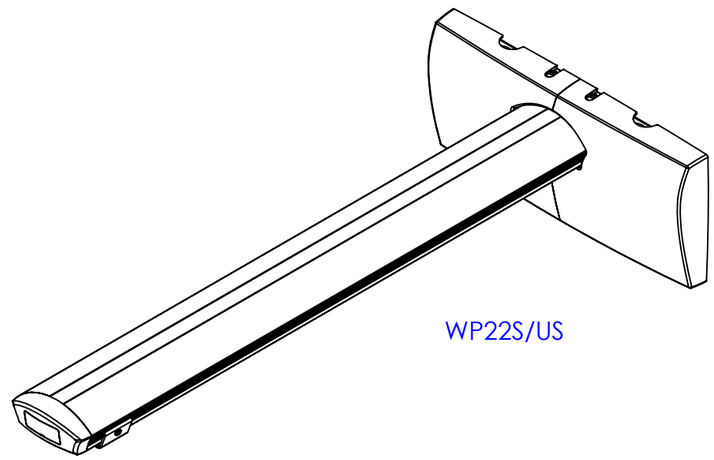

WP22S/US

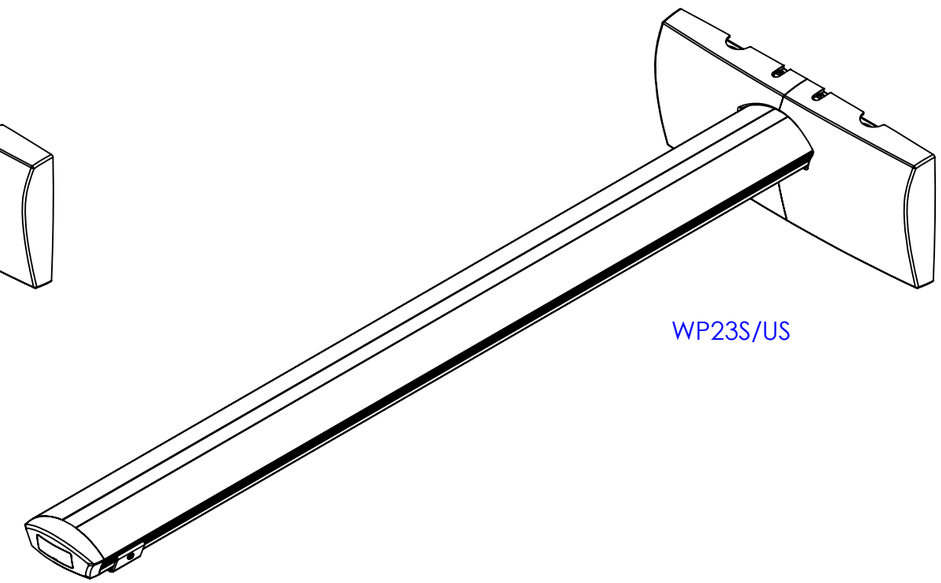

WP23S/US

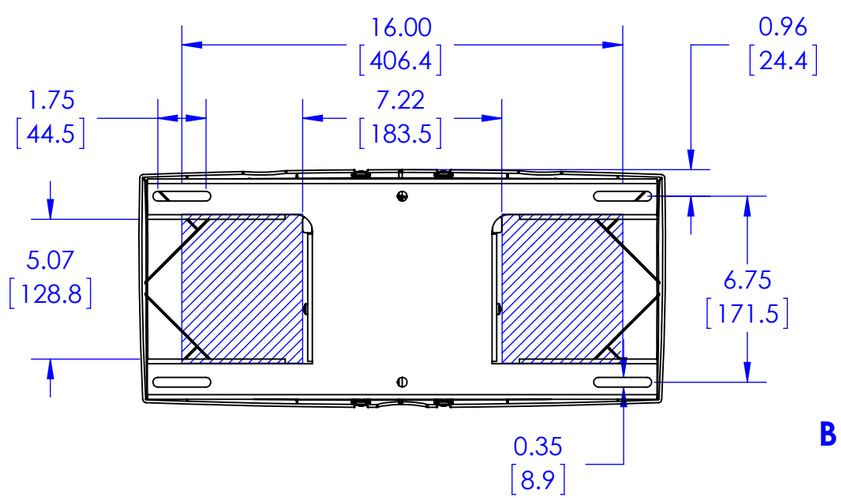

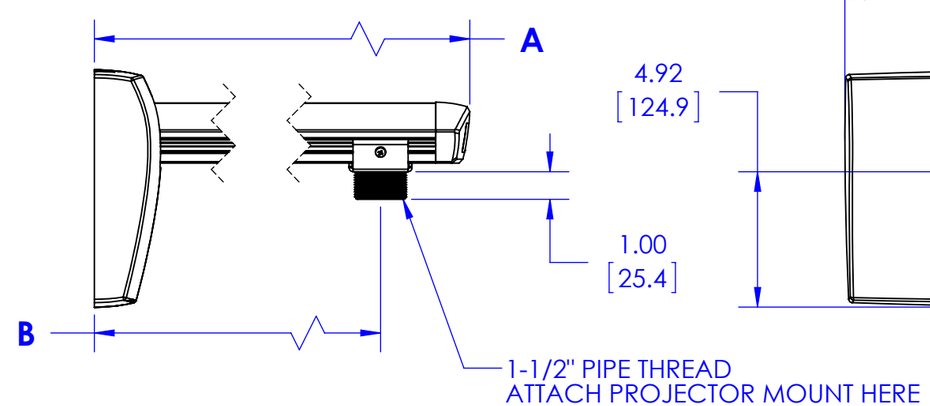

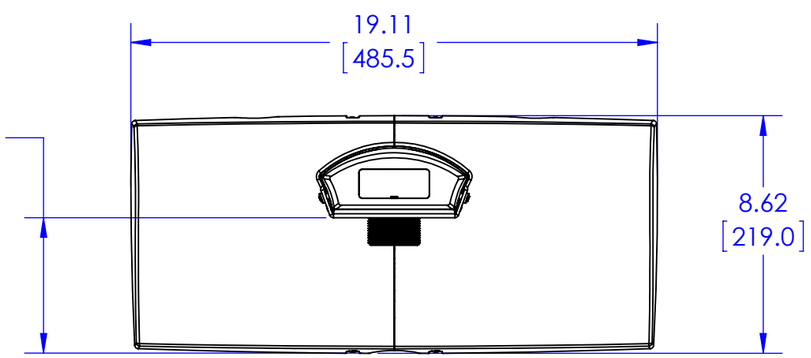

RECOMENDED LOCATIONS TO PLACE OUTLET AND FEED DATA LINES

WP2xS REQUIRES A PROJECTOR MOUNT (PURCHASED SEPARATELY)

WP2xUS INCLUDES RSAUS UNIVERSAL MOUNT INSTALLED (NOT SHOWN)

THE INFORMATION AND DESIGNS CONTAINED IN THIS DRAWING ARE CONFIDENTIAL AND THE PROPRIETARY PROPERTY OF MILESTONE AV TECHNOLOGIES NEITHER THIS DESIGN NOR ANY INFORMATION CONTAINED IN THIS DRAWING MAY BE REPRODUCED OR DISCLOSED TO OTHERS WITHOUT THE EXPRESS WRITTEN CONSENT OF MILESTONE AV TECHNOLOGIES.

CAD GENERATED DRAWING, DO NOT MANUALLY UPDATE.

DRAWN BY	MW	2/28/2012
ENG APPROVAL		
MFG APPROVAL		
QA APPROVAL		

CHIEF®
6436 CITY WEST PKWY
EDEN PRAIRIE MN, 55344
PHONE: 866-977-3901
FAX: 877-894-6918

DESCRIPTION: **SHORT THROW MOUNT**

MODEL NO.: **WP2xxS**

SHEET 1 OF 1 | SCALE **1:5.5** | SIZE **B** | DWG. NO. **TECH-000016** | REV. 02