THULE® SWEDEN RACEWAY PRO

EN 9001PRO 2 BIKE CARRIER
ES 9001PRO SOPORTE PARA 2 BICICLETAS
FR 9001PRO PORTE-VÉLOS POUR 2 VÉLOS
PT 9001PRO SUPORTE PARA 2 BICICLETAS
EN 9002PRO 3 BIKE CARRIER
ES 9002PRO SOPORTE PARA 3 BICICLETAS
FR 9002PRO PORTE-VÉLOS POUR 3 VÉLOS
PT 9002PRO SUPORTE PARA 3 BICICLETAS

EN = North American English / **ES** = Latin American Spanish / **FR** = Canadian French / **PT** = Brazilian Portuguese

EN PARTS INCLUDED / **ES** PIEZAS INCLUIDAS / **FR** PIÈCES INCLUSES / **PT** PEÇAS INCLUSAS

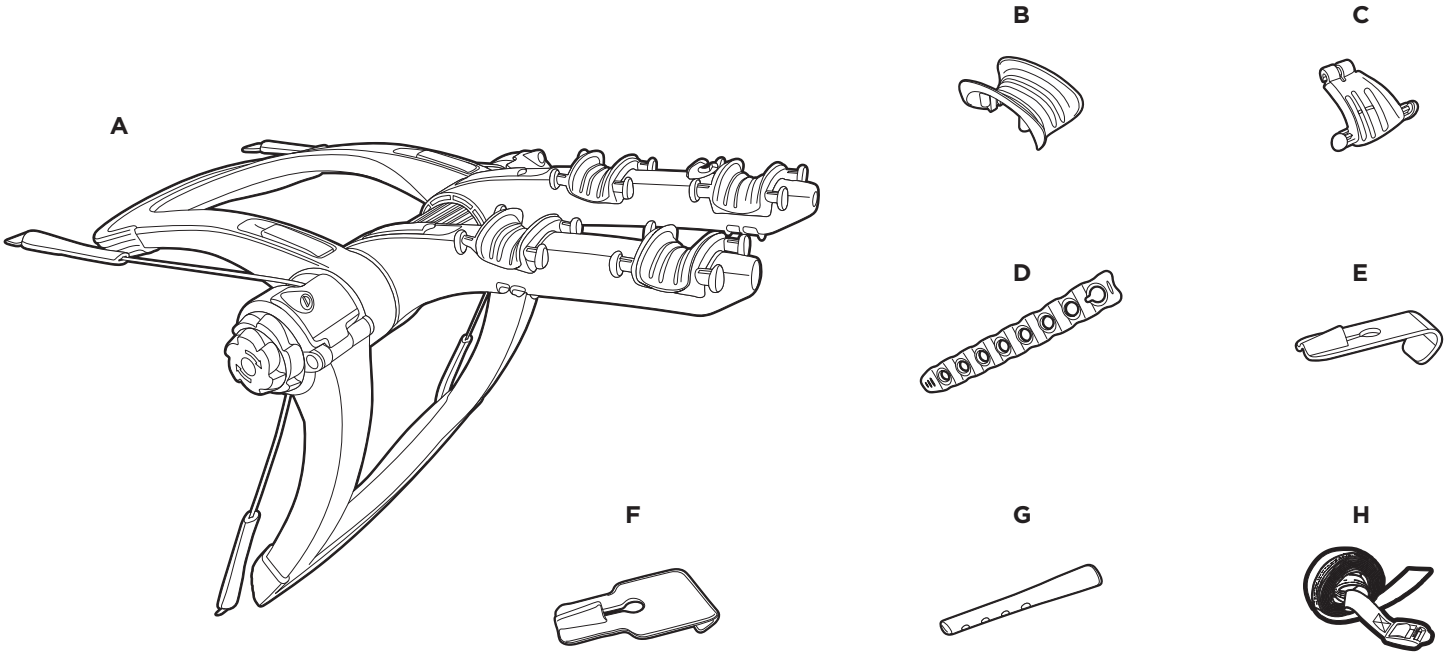

EN part **ES** pieza **FR** pièce **PT** peça	**EN** description **ES** descripción **FR** description **PT** descrição	**EN** 9001PRO qty. **ES** 9001PRO cant. **FR** 9001PRO qté. **PT** 9001PRO qtd.	**EN** 9002PRO qty. **ES** 9002PRO cant. **FR** 9002PRO qté. **PT** 9002PRO qtd.
A	**EN** 9001PRO / 9002PRO 2 OR 3 bike carrier / **ES** Portabicicletas 9001PRO / 9002PRO para 2 ó 3 bicicletas / **FR** 9001PRO / 9002PRO Porte-vélos pour 2 OU 3 vélos / **PT** 9001PRO / 9002PRO suporte para 2 ou 3 bicicletas	1	1
B	**EN** bike cradle pad / **ES** soporte acolchado para bicicleta / **FR** coussinet pour berceau / **PT** base acolchoada para bicicleta	4	6
C	**EN** anti-sway cage with overmold / **ES** jaula anti-balanceo sobredimensionada / **FR** cage stab-ilisatrice avec surmoulage / **PT** gaiola antibalanço com revestimento	2	3
D	**EN** ripple strap / **ES** correa ondulada / **FR** sangle crantée / **PT** amarra ondulada	6	9
E	**EN** bottom hook / **ES** gancho inferior / **FR** crochet inférieur / **PT** gancho inferior	2	2
F	**EN** top hook / **ES** gancho superior / **FR** crochet supérieur / **PT** gancho superior	2	2
G	**EN** cable cover / **ES** protector de cable / **FR** recouvrement de câble / **PT** protetor de cabos	4	4
H	**EN** tie down strap / **ES** apriete la correa / **FR** courroie avec boucle / **PT** amarra com presilha	1	1

EN

WARNINGS / LIMITATIONS:

- Number of bicycles carried should not exceed designated carrying capacity for your specific Raceway model.
- 9001PRO (2 bike) max. carrying capacity = 70lbs.
- 9002PRO (3 bike) max. carrying capacity = 105lbs.
- Check tightness of all bolts and knobs periodically.
- Check straps for wear and replace if worn.
- Not intended for off-road use.
- Not intended for tandems or recumbents.
- Do not install on a trailer or other towed vehicle.
- Failure to use blue safety strap may result in loss of bicycles.
- Do not open your trunk/rear hatch with the rack installed, it may cause damage to your vehicle.

ES

ADVERTENCIAS / LIMITACIONES:

- La cantidad de bicicletas transportadas no debe superar la capacidad de carga designada para su modelo específico de Raceway.
- Capacidad máxima de carga del 9001PRO (2 bicicletas) = 32kg (70 libras).
- Capacidad máxima de carga del 9002PRO (2 bicicletas) = 43kg (105 libras)
- Comprobar periódicamente que todos los pernos y perillas estén bien apretados.
- Revisar el estado de las correas y reemplazarlas si están desgastadas.
- No está diseñado para tándems ni bicicletas reclinadas.
- No destinado para el uso todoterreno.
- No instalar en un trailer ni otro vehículo a remolque.
- Si no se usa la correa de seguridad azul, se puede perder alguna de las bicicletas.
- No abra el maletero / puerta trasera con el portaequipajes instalado, ya que podría dañar su vehículo.

FR

AVERTISSEMENTS / LIMITATIONS:

- Le nombre de vélos transportés ne doit pas dépasser la capacité de transport de votre modèle de portevélos Raceway.
- Capacité de transport maxi du 9001PRO (2 vélos) = 32 kg (70 livres).
- Capacité de transport maxi du 9002PRO (2 vélos) = 43 kg (105 livres).
- Vérifiez régulièrement le serrage de toutes les vis et des écrous.
- Vérifiez l'usure des sangles et remplacez-les si elles sont usées.
- N'est pas prévu pour une utilisation tout-terrain.
- N'est pas prévu pour les tandems ni les vélos à position allongée (VPA).
- Ne l'installez pas sur une remorque ou un véhicule remorqué.
- L'absence d'utilisation de la sangle sécurité bleue peut entraîner la perte de vélos.
- N'ouvrez pas votre coffre/hayon une fois le support installé; cela pourrait causer des dommages à votre véhicule.

PT

AVISOS / LIMITAÇÕES:

- A quantidade de bicicletas carregadas não deve exceder a capacidade especificada para seu modelo específico de Raceway
- Capacidade de carga máxima do 9001PRO (2 bicicletas) = 32 kg (70 lb).
- Capacidade de carga máxima do 9002PRO (3 bicicletas) = 43 kg (70 lb).
- Verifique periodicamente a firmeza de todos os botões de rosca e parafusos.
- Verifique as amarras e substitua em caso de desgaste.
- Não projetado para uso em terrenos acidentados (off-road).
- Não projetado para uso com bicicletas reclinadas ou para duas pessoas (tandems).
- Não instale em trailer ou outro tipo de reboque.
- Se a amarra de segurança azul não for usada, as bicicletas podem se soltar e cair.
- Não abra o porta-malas ou a tampa traseira com o rack instalado; isso pode danificar o veículo.

EN PRODUCT REGISTRATION / **ES** REGISTRO DEL PRODUCTO / **FR** ENREGISTREMENT DE PRODUIT / **PT** REGISTRO DO PRODUTO	
EN	Model # _____ Purchase Date _____/_____/_____ Place of Purchase_____ Register online at www.thule.com/register THULE 42 Silvermine Road Seymour, Connecticut 06483 (800) 238-2388
ES	N.º de modelo _____ Fecha de compra _____/_____/_____ Lugar de compra _____ Regístrese en línea en: www.thule.com/register THULE 42 Silvermine Road Seymour, Connecticut 06483 (800) 238-2388
FR	No de modèle _____ Date d'achat _____/_____/_____ Magasin _____ Enregistrement en ligne sur www.thule.com/register THULE 42 Silvermine Road Seymour, Connecticut 06483 (800) 238-2388
PT	Nº de modelo _____ Data de compra _____/_____/_____ Local de compra _____ Registre online em www.thule.com/register THULE 42 Silvermine Road Seymour, Connecticut 06483 (800) 238-2388

1

EN CLEANING THE VEHICLE **/**
ES LIMPIEZA DEL VEHÍCULO **/**
FR NETTOYAGE DU VÉHICULE **/**
PT LIMPEZA DO VEÍCULO

EN

- Clean trunk/hatch and rear of car.

ES

- Limpie el portamaletas o puerta trasera y el parachoques de suvehículo.

FR

- Nettoyez le couvercle du coffre ou du hayon et l'arrière de la voiture.

PT

- Limpe o porta-malas ou a tampa traseira e o para-choques do veículo.

2

EN FIT INFORMATION **/**
ES INFORMACIÓN DE AJUSTE **/**
FR INFORMATIONS DE RÉGLAGE **/**
PT INFORMAÇÕES DE REGULAGEM

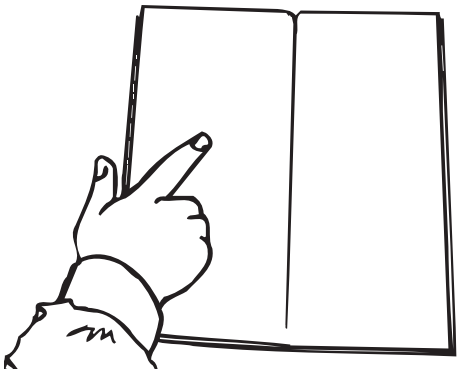

EN

- Look up your vehicle in the Fit Guide (included with these instructions) for recommended fit number. BE SURE TO READ THE FIT TIPS THAT APPLY TO YOUR VEHICLE.

ES

- Busque el número de ajuste recomendado para su vehículo en la Guía de Ajuste que se incluye con estas instrucciones. ASEGÚRESE DE LEER LOS CONSEJOS DE AJUSTE QUE APLICAN A SU VEHÍCULO.

FR

- Recherchez votre véhicule dans le guide de réglage (accompagnant ces instructions) pour le numéro de réglage recommandé. VEILLEZ À LIRE LES CONSEILS DE RÉGLAGE QUI S'APPLIQUENT À VOTRE VÉHICULE.

PT

- Procure o número de regulagem recomendado para seu veículo no Guia de Aplicação que acompanha este manual. CERTIFIQUE-SE DE LER AS DICAS DE REGULAGEM QUE SE APLICAM AO SEU VEÍCULO.

3

EN PREPARING THE RACEWAY FOR INSTALLATION **/**
ES PREPARACIÓN DE LA INSTALACIÓN DEL RACEWAY **/**
FR PRÉPARATION DU RACEWAY POUR INSTALLATION **/**
PT PREPARAÇÃO PARA INSTALAÇÃO DO RACEWAY

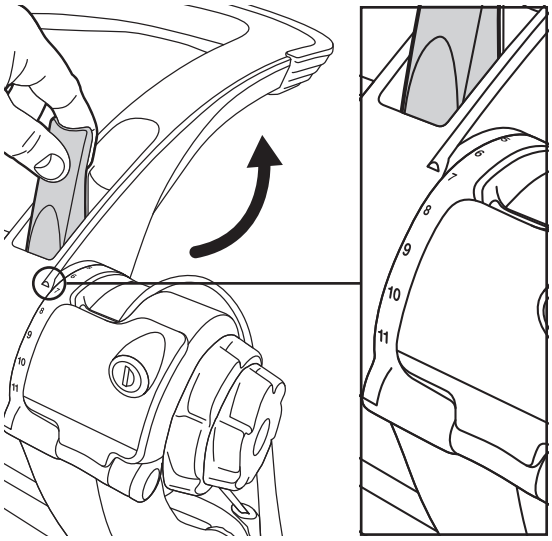

EN

- Flip open both upper frame release levers.
- Adjust upper frame position to correct fit number.
- Close both upper frame release levers.

ES

- Abra ambas palancas de liberación del marco superior.
- Coloque el número de ajuste correcto para la posición del marco superior.
- Cierre ambas palancas de liberación del marco superior.

FR

- Tirez sur les deux leviers de dégagement du cadre supérieur pour les ouvrir.
- Ajustez la position du cadre supérieur au numéro de réglage approprié.
- Abaissez les deux leviers de dégagement du cadre supérieur.

PT

- Abra as duas alavancas de liberação do quadro superior.
- Ajuste a posição do quadro superior para o número de regulagem correto.
- Feche as duas alavancas de liberação do quadro superior.

4

EN RAISING AND LOWERING RACEWAY ARMS **/**
ES ELEVACIÓN Y RETRACCIÓN DE LOS BRAZOS DEL RACEWAY **/**
FR SOULÈVEMENT ET ABAISSEMENT DES BRAS DU RACEWAY **/**
PT LEVANTAR E ABAIXAR OS BRAÇOS DO RACEWAY

A

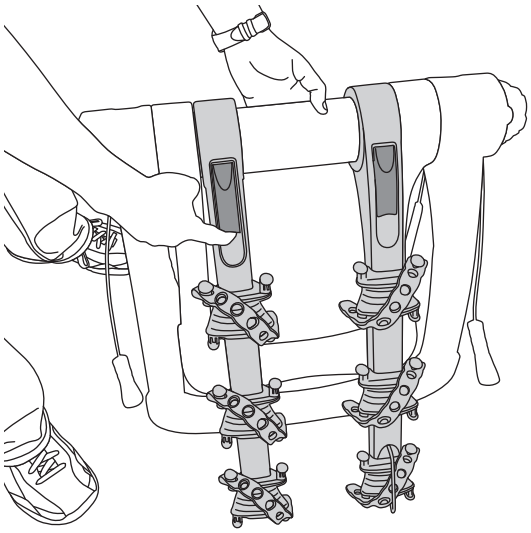

B

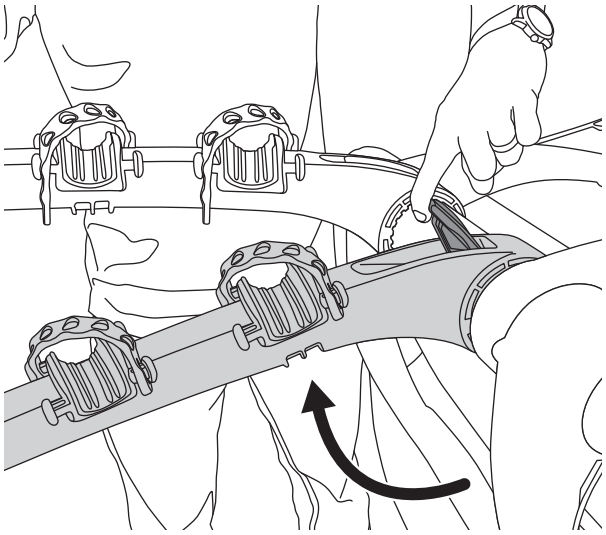

EN

A. Open or lift up on bike arm release lever to rotate bike arms up.

B. Slightly rotate arms down to fully disengage from hub and then rotate up so that arms are perpendicular to the lower frame.

- Close bike arm release lever.

ES

A. Abra o levante la palanca de liberación de los brazos para bicicletas, para girar hacia arriba los brazos para bicicletas.

B. Haga girar ligeramente los brazos hacia abajo para desengancharlos completamente del cubo y luego hágalos girar hacia arriba para que los brazos queden perpendiculares al marco inferior.

- Cierre la palanca de liberación de los brazos para bicicletas.

FR

A. Ouvrez ou soulevez le levier de dégagement des bras du portevélos afin de les faire pivoter vers le haut.

B. Faites pivoter légèrement les bras vers le bas pour les désengager du moyeu et faites-les ensuite pivoter vers le haut de façon à ce qu'ils soient perpendiculaires avec le cadre inférieur.

- Abaissez le levier de dégagement des bras du porte-vélos.

PT

A. Abra ou levante a alavanca de liberação do braço da bicicleta para erguê-lo.

B. Gire ligeiramente os braços para baixo para soltá-los do cubo e então gire para cima para que os braços fiquem perpendiculares ao quadro inferior.

- Feche a alavanca de liberação do braço da bicicleta.

5

EN MOUNT RACEWAY ON VEHICLE **/**
ES INSTALACIÓN DEL RACEWAY EN UN VEHÍCULO **/**
FR MONTAGE DU RACEWAY SUR LE VÉHICULE **/**
PT MONTAGEM DO RACEWAY NO VEÍCULO

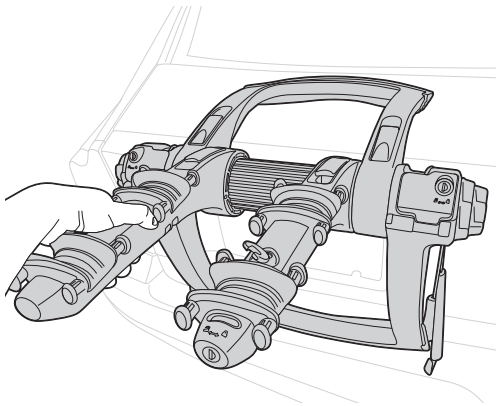

EN

- Mount carrier to the back of vehicle. Refer to Fit Tips for specific placement instructions.

NOTE: Do not open your trunk/rear hatch with the rack installed, it may cause damage to your vehicle.

ES

- Monte el portabicicletas en la parte trasera de su vehículo. Refiérase a los puntos de encaje para obtener instrucciones específicas de colocación.

NOTA: No abra el maletero / puerta trasera con el portaequipajes instalado, ya que podría dañar su vehículo.

FR

- Installez le porte-vélo à l'arrière du véhicule. Référez-vous aux Conseils de réglage pour déterminer l'emplacement exact.

REMARQUE: N'ouvrez pas votre coffre/hayon une fois le support installé; cela pourrait causer des dommages à votre véhicule.

PT

- Encaixe o suporte na parte traseira do veículo. Consulte as Dicas de Regulagem para instruções específicas de instalação.

OBS.: Não abra o porta-malas ou a tampa traseira com o rack instalado; isso pode danificar o veículo.

EN INSTRUCTION TIPS / **ES** CONSEJOS / **FR** CONSEILS / **PT** INSTRUÇÕES

EN

- Move down the top rubber boots to cover the edge of deep hatches and spoilers. Thus, eliminating cable rub.
- FOR TIGHTLY-TOLERANCED HATCHES:
  Remove the hook from the cable and install it on the vehicle before installing the whole rack as shown in STEP 8.

ES

- Mueva hacia abajo las cubiertas de goma superiores para cubrir el extremo de los deflectores y las compuertas profundas. De esta manera, se evita el roce de los cables.
- PARA COMPUERTAS CON POCO ESPACIO:
  Retire el gancho del cable y colóquelo en el vehículo, antes de instalar todo el portaequipajes, como se muestra en el PASO 8.

FR

- Abaissez les gaines de caoutchouc supérieures afin de recouvrir le rebord du hayon ou du becquet), afin d'éliminer le frottement du câble.
- POUR LES HAYONS AVEC ESPACE INTERSTITIEL ÉTROIT : Retirez le crochet du câble et installez-le sur le véhicule avant d'installer l'ensemble du porte-vélos, comme illustré à l'ÉTAPE 8.

PT

- Mova os protetores de borracha da parte superior para baixo para cobrir as extremidades de tampas traseiras ou spoilers para evitar a fricção do cabo.
- PARA TAMPAS TRASEIRAS COM POUCO ESPAÇO:
  Remova o gancho do cabo e instale-o no veículo antes de instalar o rack inteiro, conforme mostrado na ETAPA 8.

6

EN SECURING RACEWAY ON VEHICLE: TOP CABLES / **ES** FIJACIÓN DEL RACEWAY EN UN VEHÍCULO: CABLES SUPERIORES / **FR** FIXATION DU RACEWAY SUR LE VÉHICULE : CÂBLES SUPÉRIEURS / **PT** FIXAÇÃO DO RACEWAY NO VEÍCULO: CABOS SUPERIORES

A

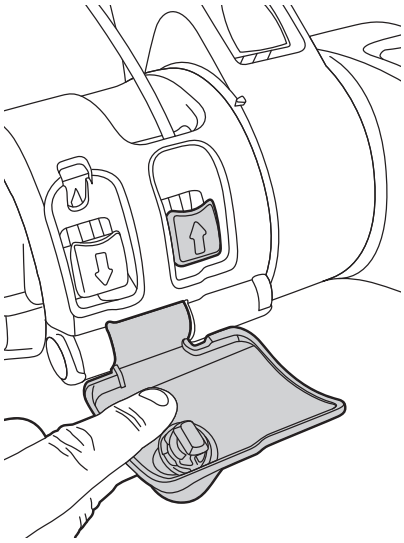

B

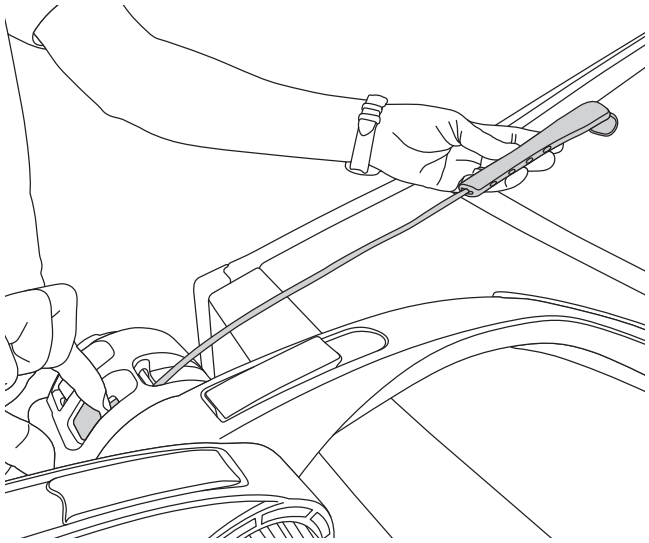

EN

A. Open lock cover and pull up top cable release lever.

B. Pull enough cable out to fit top hook.

ES

A. Abra la cubierta de la cerradura y tire hacia arriba la palanca de liberación del cable superior.

B. Saque suficiente cable para conectarlo en el gancho superior.

FR

A. Ouvrez le couvercle de verrouillage et tirez sur le levier de dégagement du câble supérieur.

B. Faites passer une longueur de câble suffisante pour l'insérer dans le crochet supérieur.

PT

A. Abra a tampa da trava e levante a alavanca de liberação do cabo superior.

B. Puxe uma quantidade de cabo suficiente para fixá-lo ao gancho superior.

C

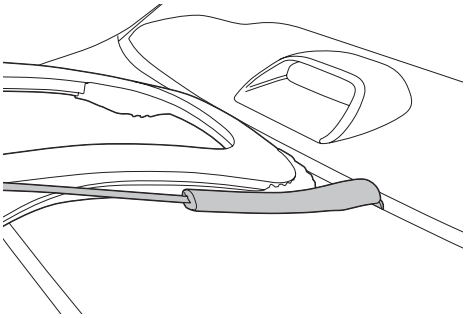

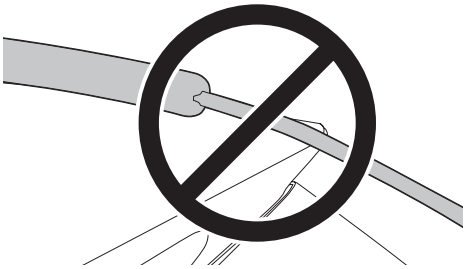

EN INCORRECT **FR** MAUVAIS
ES INCORRECTO **PT** INCORRETO

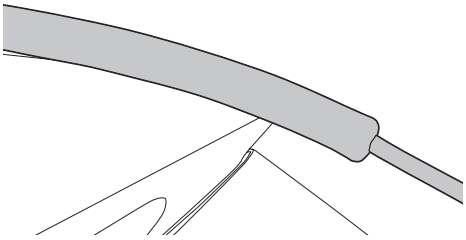

EN CORRECT **FR** CORRECT
ES CORRECTO **PT** CORRETO

D

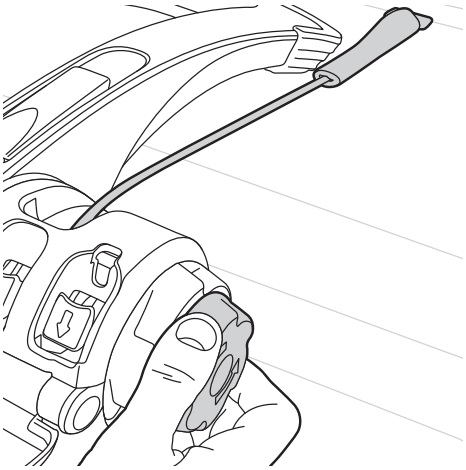

EN

C. Attach top hooks according to Fit Tips for your car.

NOTE: Make certain cable cover is in place to protect vehicle finish.

- You may need to route straps in from the sides to get straps into their recommended place on the vehicle.

NOTE: If cable is contacting vehicle – cable cover can be repositioned on cable to provide protection.

D. Tighten top cables by rotating small knob.

- Repeat for other top hook.

NOTE: Tighten strap only enough to hold rack in place without changing its position.

ES

C. Monte los ganchos superiores de acuerdo con los Consejos de ajuste para su automóvil.

NOTA: Controle que el protector de cable esté en su lugar para proteger la terminación de su vehículo.

- Puede ser necesario hacer pasar las correas por los costados para que queden en el lugar recomendado del vehículo.

NOTA: Si el cable está en contacto con el vehículo, se puede reubicar el protector de cable para protegerlo.

D. Ajuste los cables superiores haciendo girar la perilla pequeña.

- Repita los pasos con los demás ganchos superiores.

NOTA: Ajuste la correa sólo lo suficiente para mantener el portaequipajes en su lugar sin cambiar su posición.

FR

C. Fixez les crochets supérieurs conformément aux conseils de réglages pour votre voiture.

REMARQUE: Assurez-vous que le recouvrement de câble soit bien en place afin de protéger le fini du véhicule.

- Il se peut que vous deviez faire passer les sangles depuis les côtés afin qu'elles soient à la position recommandée sur le véhicule.

REMARQUE: Si le câble est en contact avec le véhicule, le recouvrement de câble peut être repositionné sur le câble pour protéger le véhicule.

D. Serrez les câbles supérieurs en faisant tourner le petit bouton.

- Répétez pour l'autre crochet supérieur.

REMARQUE: Serrez suffisamment la sangle pour retenir le porte-vélos en place sans modifier sa position.

PT

C. Fixe os ganchos superiores de acordo com as Dicas de Regulagem para seu veículo.

OBS.: Certifique-se de que o protetor de cabos está bem posicionado para proteger a pintura do veículo.

- Pode ser necessário passar as amarras pelas laterais para mantê-las na posição recomendada no veículo.

OBS.: Se o cabo estiver em contato com o veículo, pode-se reposicionar o protetor de cabos para protegê-lo.

D. Aperte os cabos superiores girando o botão de rosca pequeno.

- Repita o procedimento para o outro gancho superior.

OBS.: Aperte a amarra apenas o suficiente para manter o rack no lugar sem mudá-lo de posição.

EN SECURING RACEWAY ON VEHICLE: BOTTOM CABLES / **ES** FIJACIÓN DEL RACEWAY EN UN VEHÍCULO: CABLES INFERIORES / **FR** FIXATION DU RACEWAY SUR LE VÉHICULE : CÂBLES INFÉRIEURS / **PT** FIXAÇÃO DO RACEWAY NO VEÍCULO: CABOS INFERIORES

A

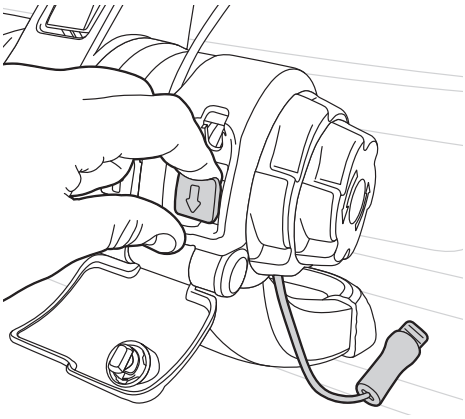

B

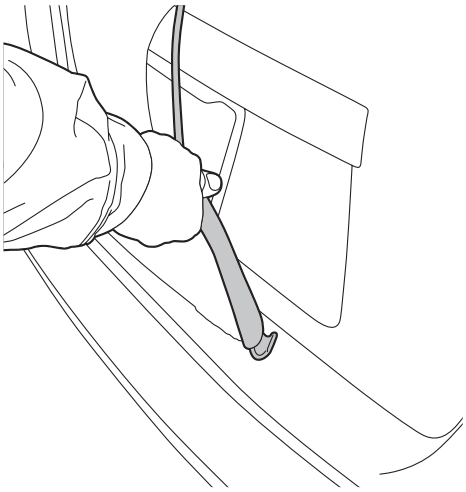

C

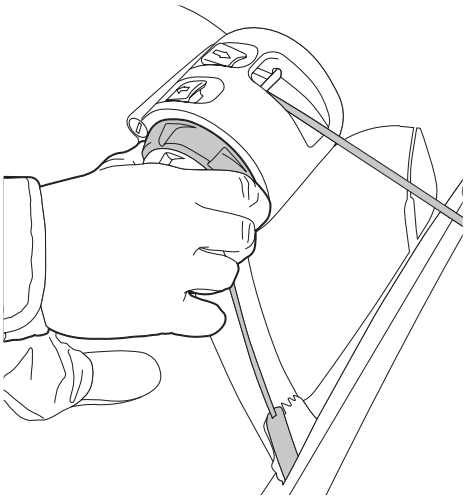

EN

A. Pull up bottom cable release lever.

- Pull enough cable out to fit bottom hook.

B. Attach bottom hooks according to Fit Tips for your car. Always make sure that cables and cable covers are out of the way of hot exhaust gasses and not in contact with the muffler or exhaust pipe.

NOTE: Make certain cable cover is in place.

C. Tighten bottom cables by rotating large knob.

- Repeat for other bottom hook.
- Be sure lower frame is in correct position.
- Refer to Fit Tips.

ES

A. Tire de la palanca de liberación del cable inferior.

- Saque suficiente cable para conectarlo en el gancho inferior.

B. Monte los ganchos inferiores de acuerdo con los Consejos de ajuste para su automóvil. Controle siempre que los cables y los protectores de cables estén alejados de los gases de escape y no queden en contacto con el silenciador o con el caño de escape.

NOTA: Controle que el protector de cable esté en su lugar.

C. Ajuste los cables superiores haciendo girar la perilla grande.

- Repita los pasos con los demás ganchos inferiores.
- Controle que el marco inferior esté en la posición correcta.
- Consultar los Consejos de ajuste.

FR

A. Tirez sur le levier de dégagement des câbles inférieurs.

- Faites passer une longueur de câble suffisante pour l'insérer dans le crochet inférieur.

B. Fixez les crochets inférieurs conformément aux conseils de réglages pour votre voiture. Assurez-vous en tout temps que les câbles et les recouvrements de câble ne sont pas dans la trajectoire des gaz d'échappement chauds et qu'ils ne sont pas en contact avec le silencieux et le tuyau d'échappement.

REMARQUE: Assurez-vous que le recouvrement de câble est en place.

C. Serrez les câbles inférieurs en faisant tourner le grand bouton.

- Répétez pour l'autre crochet inférieur.
- Assurez-vous que le bas du cadre est à la position appropriée.
- Consultez les conseils de réglage.

PT

A. Levante a alavanca de liberação do cabo inferior.

- Puxe uma quantidade de cabo suficiente para fixá-lo ao gancho inferior.

B. Fixe os ganchos inferiores de acordo com as Dicas de Regulagem para seu veículo. Sempre verifique se os cabos e os protetores de cabos não estão na direção dos gases quentes do escapamento ou em contato com o silenciador ou escapamento.

OBS.: Certifique-se que o protetor de cabos esteja bem posicionado.

C. Aperte os cabos inferiores girando o botão de rosca grande.

- Repita o procedimento para o outro gancho inferior.
- Certifique-se de que o quadro inferior esteja na posição correta.
- Consulte as Dicas de Regulagem.

8

EN TIGHT HATCH ALTERNATE MOUNTING METHOD **/**
ES MÉTODO DE INSTALACIÓN ALTERNATIVO EN COMPUERTAS CON POCO ESPACIO **/**
FR MÉTHODE D'INSTALLATION ALTERNATIVE POUR HAYON AVEC ESPACE INTERSTITIEL ÉTROIT **/**
PT MÉTODO DE INSTALAÇÃO ALTERNATIVO PARA TAMPAS TRASEIRAS COM POUCO ESPAÇO

A

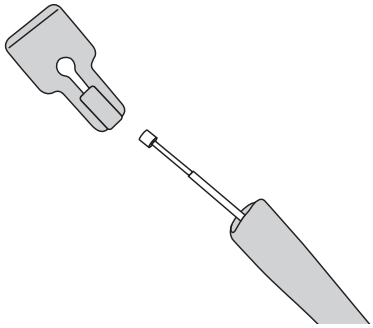

B

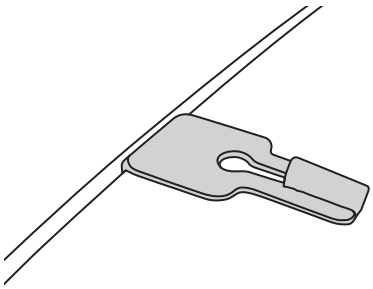

C

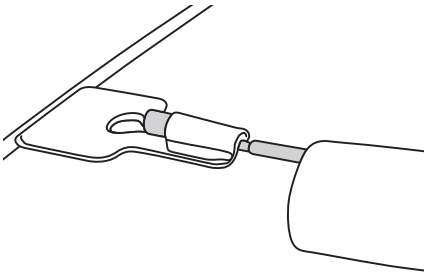

EN

NOTE: Start with top hooks and repeat process, if need be for bottom hooks.

A. Remove the hook from the cable.

- Pull back grey rubber boot.
- Slide hook off of cable end.

B. Install hook onto vehicle hatch/ trunk.

C. Reinstall the hook onto the cable.

- Slide hook into notch on cable end.
- Slide boot over hook, unless it is needed to cover the cable bending over the hatch/trunk.

ES

NOTA: Comience con los ganchos superiores y, si es necesario, repita el proceso con los ganchos inferiores.

A. Retire el gancho del cable.

- Retire la cubierta de goma gris.
- Deslice el gancho hasta el extremo del cable para retirarlo.

B. Coloque el gancho en la compuerta o el baúl del vehículo.

C. Vuelva a colocar el gancho en el cable.

- Deslice el gancho en la ranura del extremo del cable.
- Deslice la cubierta sobre el gancho, a menos que sea necesaria para cubrir el doblez del cable sobre la compuerta o el baúl.

FR

REMARQUE: Commencez par les crochets supérieurs et, si nécessaire, répétez le processus pour les crochets inférieurs.

A. Détachez le crochet du câble.

- Reculez la gaine de caoutchouc gris.
- Dégagez le crochet de l'extrémité du câble.

B. Installez le crochet sur le hayon/coffre du véhicule.

C. Réinstallez le crochet sur le câble.

- Glissez le crochet dans la fente de l'extrémité de câble.
- Glissez la gaine par-dessus le crochet, à moins qu'elle soit requise pour recouvrir le point de contact sur le hayon/coffre.

PT

OBS.: Comece pelos ganchos superiores e, se necessário, repita o procedimento com os ganchos inferiores.

A. Retire o gancho do cabo.

- Retire o protetor de borracha cinza.
- Deslize o gancho até a extremidade do cabo para retirá-lo.

B. Coloque o gancho na tampa traseira ou porta-malas do veículo.

C. Recoloque o gancho no cabo.

- Deslize o gancho na ranhura pela extremidade do cabo.
- Deslize o protetor por sobre o gancho, somente se for necessário para cobrir a dobra do cabo sobre a tampa traseira ou porta-malas.

9

EN INSTALLING THE NO-SWAY CAGE /
ES INSTALACIÓN DE LA JAULA NO-SWAY /
FR INSTALLATION DES CAGES STABILISATRICES NO-SWAY /
PT INSTALAÇÃO DAS GAIOLAS ANTIBALANÇO

A

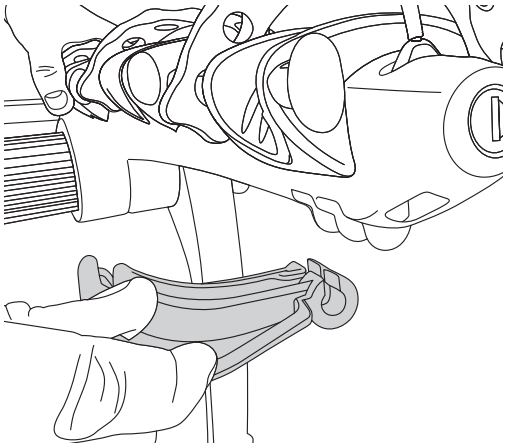

B

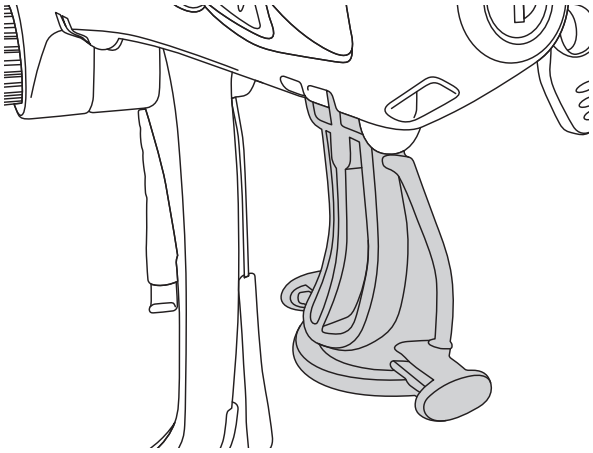

EN

A. Attach No-Sway Cages to bike arm (smooth concave section towards outside).

B. Rotate No-Sway Cages outward.

ES

A. Monte las Jaulas No-Sway en el brazo para bicicletas (sección cóncava lisa hacia fuera).

B. Haga girar las Jaulas No-Sway hacia fuera.

FR

A. Fixez les cages stabilisatrices No-Sway sur les bras de vélo (section lisse concave vers l'extérieur).

B. Faites tournes les cages stabilisatrices No-Sway vers l'extérieur.

PT

A. Monte as gaiolas antibalanço no braço da bicicleta (a parta côncava lisa voltada para fora).

B. Gire as gaiolas antibalanço para fora.

9

EN INSTALLING THE STRAPS /
ES INSTALACIÓN DE LAS CORREAS /
FR INSTALLATION DES SANGLES /
PT INSTALAÇÃO DAS AMARRAS

C

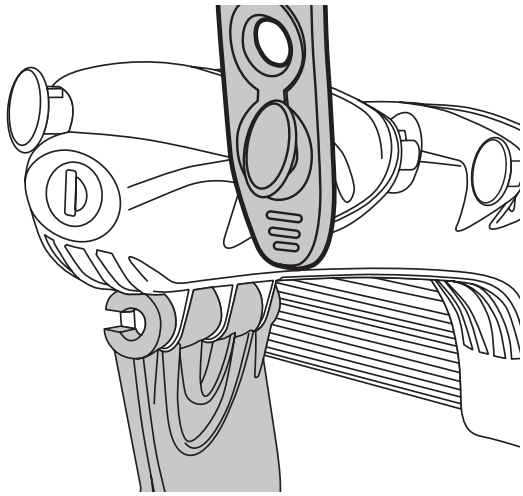

D

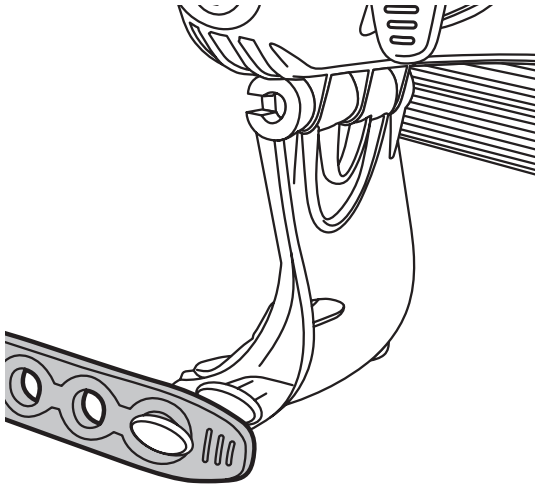

EN

C. Attach bike straps to bike arm cradles.

D. Attach bike straps to No-Sway Cages.

ES

C. Monte las correas para bicicleta en los soportes para los brazos para bicicletas.

D. Monte las correas para bicicleta en las Jaulas No-Sway.

FR

C. Fixez les sangles pour vélo sur les berceaux du bras de vélo.

D. Fixez les sangles pour vélo sur les cages stabilisatrices No-Sway.

PT

C. Monte as amarras da bicicleta nas bases do braço da bicicleta.

D. Monte as amarras da bicicleta nas gaiolas antibalanço.

10

EN ADJUST BIKE ARMS **/**
ES AJUSTE LOS BRAZOS PARA BICICLETAS **/**
FR AJUSTEMENT DES BRAS DE VÉLO **/**
PT AJUSTE DOS BRAÇOS DA BICICLETA

A

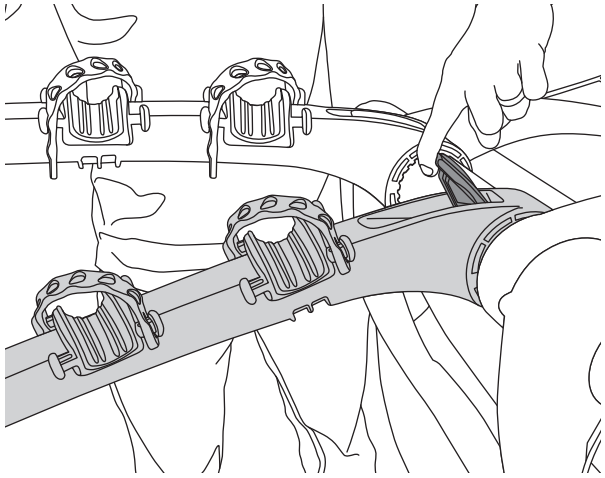

B

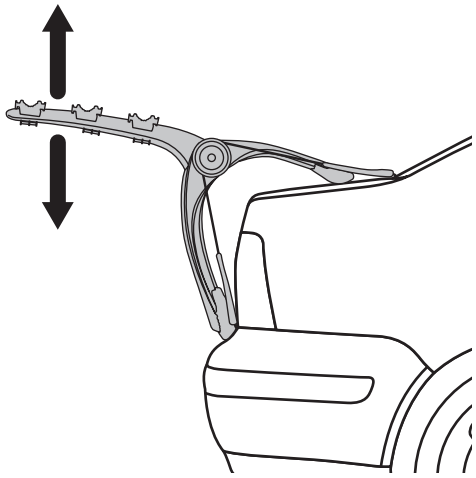

EN

- If necessary adjust bike arm so that they are pointing slightly upward.
- If necessary slide arms closer together to make it easier to fit smaller frame bicycles.

ES

- En caso de ser necesario, ajustar el brazo para bicicletas de manera que quede apuntando ligeramente hacia arriba.
- Si es necesario, deslice los brazos para juntarlos, a fin de facilitar la colocación de bicicletas con cuadros más pequeños.

FR

- Au besoin, ajustez les bras de vélo de façon à ce qu'ils pointent légèrement vers le haut.
- Si nécessaire, glissez les bras pour les rapprocher l'un de l'autre, pour les cadres de vélos plus petits.

PT

- Se necessário, ajuste o braço da bicicleta de modo que fiquem ligeiramente inclinados para cima.
- Se necessário, aproxime os braços, deslizando-os, para facilitar o encaixe de bicicletas com quadros menores.

11

EN MOUNTING BIKES **/**
ES INSTALACIÓN DE LAS BICICLETAS **/**
FR MONTAGE DES VÉLOS **/**
PT INSTALAÇÃO DAS BICICLETAS

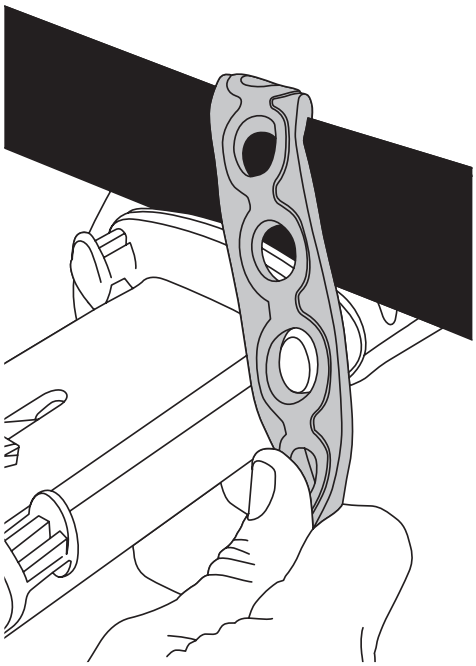

EN

- Load the heaviest bike first with the handlebars on the passenger side of vehicle.
- Alternate direction of bikes when loading.
- Ensure straps are tightened securely around bike.

ES

- Cargar primero las bicicletas más pesadas con los manubrios hacia el lado del pasajero del vehículo.
- Alternar la dirección de las bicicletas cuando se carguen.
- Asegúrese de que las correas de las abrazaderas estén apretadas alrededor de los tubos de sus bicicletas.

FR

- Chargez tout d'abord le vélo le plus lourd; guidon du côté passager du véhicule.
- Alternez le sens des vélos lors du chargement.
- Vérifiez si les sangles sont bien serrées autour des vélos.

PT

- Coloque primeiro a bicicleta mais pesada com o guidão para o lado do passageiro do veículo.
- Coloque as bicicletas em lados alternados.
- Certifique-se de que as amarras estão ajustadas firmemente em volta da bicicleta.

12

EN NO-SWAY CAGE ADJUSTMENT **/**
ES AJUSTE DE LA JAULA NO-SWAY **/**
FR AJUSTEMENT DE LA CAGE STABILISATRICE NO-SWAY **/**
PT AJUSTE DA GAIOLA ANTIBALANÇO

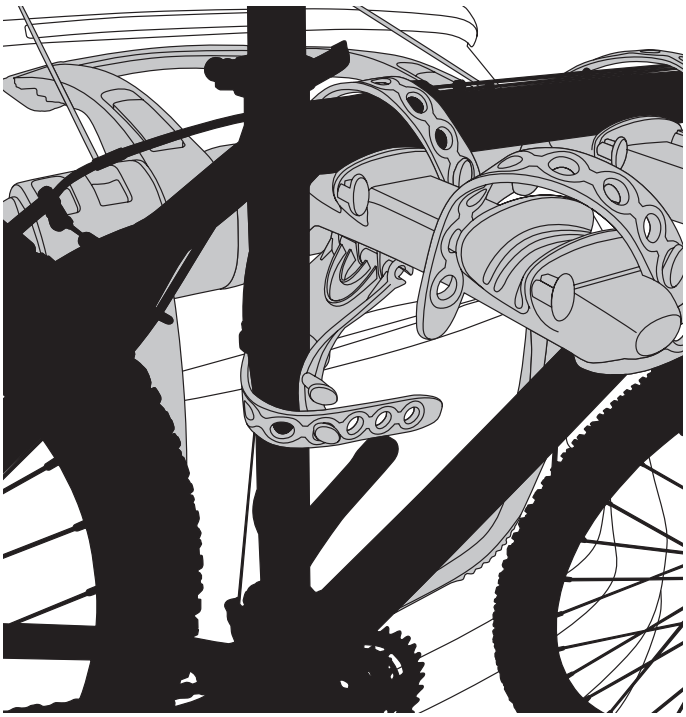

EN

- Attach No-Sway Cage strap around the vertical bicycle tube and tighten securely.

ES

- Monte la Correa de la jaula No-Sway alrededor del tubo vertical de la bicicleta y ajústela firmemente.

FR

- Entourez le tube vertical du vélo avec la sangle de la cage stabilisatrice No-Sway et serrez-la fermement.

PT

- Monte a amarra da gaiola antibalanço em torno do cano vertical da bicicleta e aperte com firmeza.

13

EN BLUE STRAP USAGE **/**
ES USO DE LA CORREA AZUL **/**
FR UTILISATION DE LA SANGLE BLEUE **/**
PT USO DA AMARRA AZUL

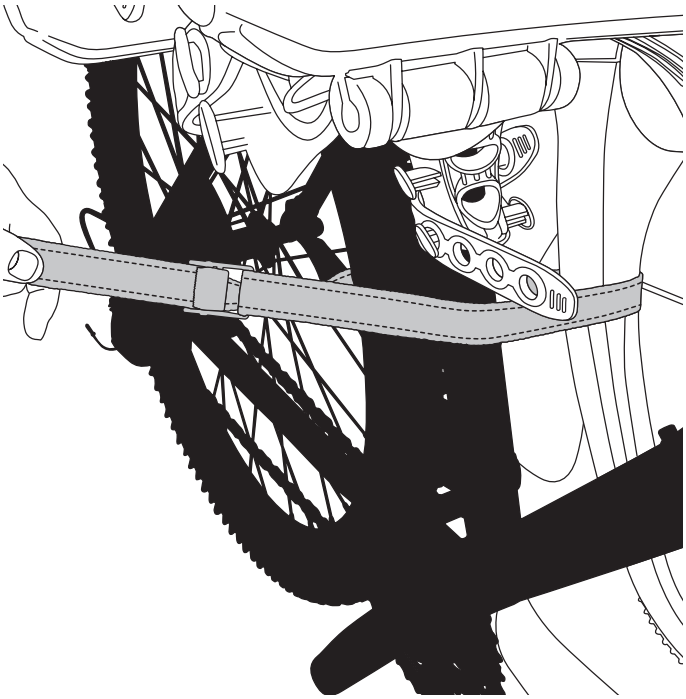

EN

- Wrap blue strap through bikes and secure to lower frame of Raceway.

ES

- Haga pasar la correa azul a través de las bicicletas y ajústela en el marco inferior del Raceway.

FR

- Faites passer la sangle bleue dans le cadre du vélo et fixez-la sur le cadre inférieur du Raceway.

PT

- Envolva as bicicletas com a amarra azul, prendendo-a no quadro inferior do Raceway.

14

EN ROTATING BIKE ARMS DOWN /
ES PLEGADO DE LOS BRAZOS PARA BICICLETAS /
FR ROTATION DES BRAS DE VÉLO VERS LE BAS /
PT ROTAÇÃO DOS BRAÇOS DA BICICLETA PARA BAIXO

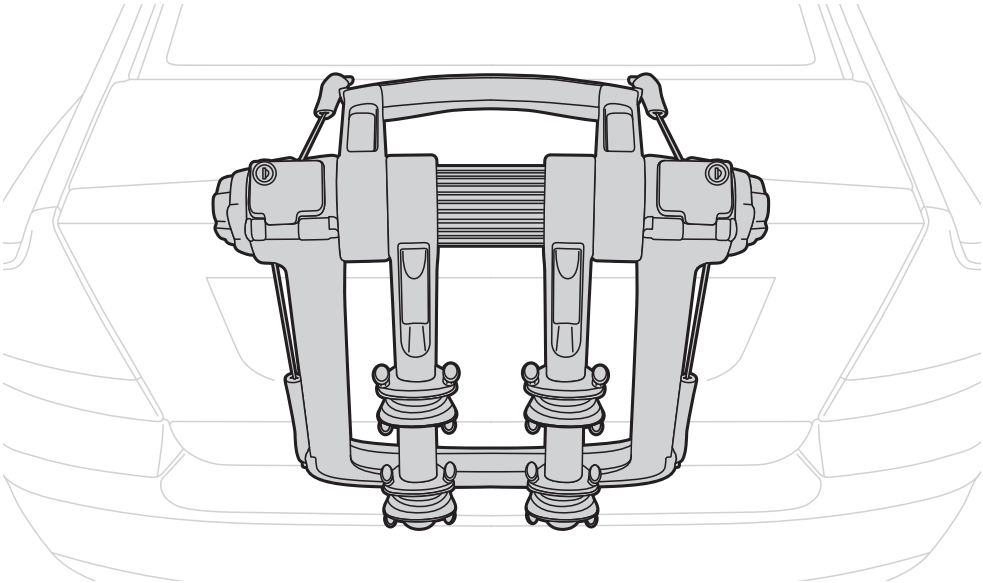

EN

- Flip open bike arm release lever.
- Rotate bike arms down.
- Make certain to leave adequate space from vehicle.
- Close bike arm release lever.

ES

- Abra la palanca de liberación del brazo para bicicletas.
- Haga girar los brazos para bicicletas hacia abajo.
- Controle que quede a una distancia adecuada del vehículo.
- Cierre la palanca de liberación de los brazos para bicicletas.

FR

- Soulevez le levier de dégagement du bras de vélo.
- Faites pivoter les bras de vélos vers le bas.
- Assurez-vous de laisser suffisamment d'espace entre les bras et le véhicule.
- Abaissez le levier de dégagement des bras du porte-vélos.

PT

- Abra a alavanca de liberação do braço da bicicleta.
- Gire os braços da bicicleta para baixo.
- Certifique-se de deixar espaço suficiente entre o braço e o veículo.
- Feche a alavanca de liberação do braço da bicicleta.

15

EN REMOVING RACK FROM VEHICLE /
ES RETIRAR EL PORTAEQUIPAJES DEL VEHÍCULO /
FR ENLÈVEMENT DU PORTE-VÉLOS DU VÉHICULE /
PT REMOÇÃO DO RACK DO VEÍCULO

A

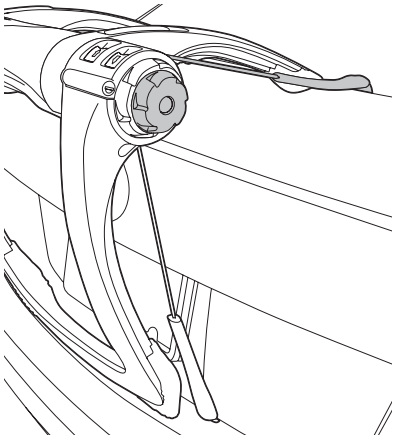

EN

TOP CABLE REMOVAL

A. Pull up top cable release lever.

- Pull a short length of cable out.
- Remove top hook. Shorten with small knobs.

ES

DESMONTAJE DEL CABLE SUPERIOR

A. Tire de la palanca de liberación del cable superior.

- Saque una corta sección del cable.
- Retire el gancho superior. Acorte con las perillas pequeñas.

FR

RETRAIT DES CÂBLES SUPÉRIEURS

A. Tirez sur le levier de dégagement des câbles supérieurs.

- Faites sortir une petite longueur de câble.
- Enlevez le crochet supérieur. Serrez le câble en faisant tourner le petit bouton.

PT

REMOÇÃO DO CABO SUPERIOR

A. Levante a alavanca de liberação do cabo superior.

- Puxe uma pequena quantidade de cabo.
- Retire o gancho superior. Encurte com os botões de rosca pequenos.

15

EN REMOVING RACK FROM VEHICLE (CONTINUED) /
ES RETIRAR EL PORTAEQUIPAJES DEL VEHÍCULO (CONTINUACIÓN) /
FR ENLÈVEMENT DU PORTE-VÉLOS DU VÉHICULE (SUITE) /
PT REMOÇÃO DO RACK DO VEÍCULO (CONTINUAÇÃO)

B

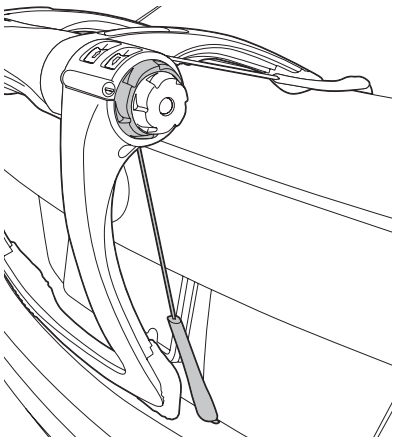

EN

BOTTOM CABLE REMOVAL

B. Pull up bottom cable release lever.

- Pull a short length of cable out.
- Remove bottom hook. Shorten with large knob.

ES

DESMONTAJE DEL CABLE INFERIOR

B. Tire de la palanca de liberación del cable inferior.

- Saque una corta sección del cable.
- Retire el gancho inferior. Acorte con la perilla grande.

FR

ENLÈVEMENT DES CÂBLES INFÉRIEURS

B. Tirez sur le levier de dégagement des câbles supérieurs.

- Faites sortir une petite longueur de câble.
- Enlevez le crochet inférieur. Serrez le câble en faisant tourner le gros bouton.

PT

REMOÇÃO DO CABO INFERIOR

B. Levante a alavanca de liberação do cabo inferior.

- Puxe uma pequena quantidade de cabo.
- Retire o gancho inferior. Encurte com os botões de rosca grandes.

16

EN LOCKING BIKES AND CARRIER /
ES FIJACIÓN DE BICICLETAS Y SOPORTE /
FR VERROUILLAGE DES VÉLOS ET DU PORTE-VÉLOS /
PT TRAVAS DAS BICICLETAS E DO SUPORTE

A

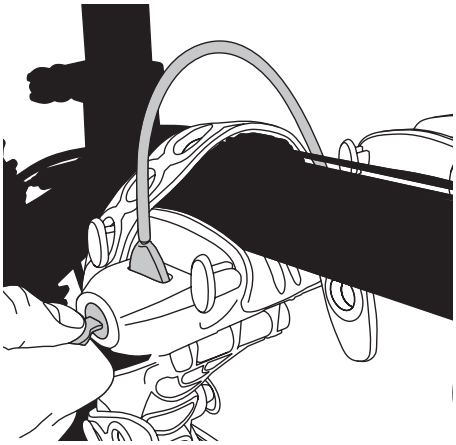

B

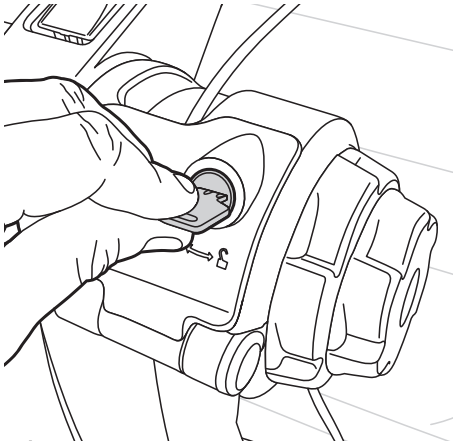

EN

LOCKING BIKES

A. Pass locking cable over bike frame and secure in lock slot by turning key clockwise to horizontal position.

LOCK CARRIER

B. Close cover and lock carrier to vehicle by turning key clockwise to horizontal position.

- Lock both spool cylinders on opposite sides of hub.

ES

FIJACIÓN DE BICICLETAS

A. Haga pasar el cable de fijación sobre el marco de la bicicleta en engánchelo en la ranura de cierre haciendo girar la llave hacia la derecha hasta que quede en posición horizontal.

FIJACIÓN DEL SOPORTE

B. Cierre la cubierta y trabe el soporte al vehículo; para ello, gire la llave en sentido horario hasta que quede en posición horizontal.

- Trabe ambos cilindros de carrete, en los lados opuestos del cubo.

FR

VERROUILLAGE DES VÉLOS

A. Faites passer le câble de verrouillage au-dessus du cadre du vélo et insérez son extrémité dans la fente de verrouillage en tournant la clé dans le sens inverse des aiguilles d'une monte pour qu'elle soit à l'horizontale.

VERROUILLAGE DU PORTEVÉLOS

B. Refermez le couvercle et verrouillez le porte-vélos au véhicule en tournant la clé en sens horaire en position horizontale.

- Verrouillez les deux enrouleurs à chaque extrémité du moyeu.

PT

TRAVAS DAS BICICLETAS

A. Passe o cabo da trava por sobre o quadro da bicicleta e prenda-o na abertura da trava girando a chave em sentido horário até a posição horizontal.

TRAVA DO SUPORTE

B. Feche a tampa e trave o suporte no veículo girando a chave em sentido horário até a posição horizontal.

- Trave as duas bobinas em cada extremidade do cubo.

EN = North American English

THULE RACK GUIDELINES

When using Thule Load carriers and accessories, the user must understand the precautions. The points listed below will assist you in using the rack system and will encourage safety.

- For quality fits and safety, use only the recommended rack or accessory as stated in Thule's current Fit Guide. Do not assume a rack will fit, always check the current Fit Guide when obtaining a new vehicle.
- The maximum load specified in the assembly instructions is not to be exceeded. However, this limit is always subordinate to the maximum load recommended by the manufacturer of the car itself. It is always the lower maximum recommended load that applies. **Max roof load = load carrier weight + any fitted carrier accessories + the weight of the load itself.**
- Always make sure all doors are open when mounting a roof rack system. Make sure all knobs, bolts, screws, straps, and locks are firmly attached, tightened and locked before every trip. Knobs, bolts, screws, straps and locks must be periodically inspected for signs of wear, corrosion, and fatigue. Check your load at stops during the trip to ensure continued fastening security.
- Check local and state laws governing projection of objects beyond the perimeter of a vehicle. Be aware of the width and height of your cargo since low clearance branches, bridges, and parking garages can affect the load. All cargo will affect the vehicle's driving behavior. Never drive with any lock, knob or rack in an open or unlocked position. All long loads such as, but not limited to, sailboards, surfboards, kayaks, canoes, and lumber must be tied down front and rear to the bumpers or tow hooks of the vehicle.
- Remove your Thule rack and accessories when they are not in use and before entering automatic car washes.
- All locks must be turned and moved periodically to ensure smooth operation. Use graphite or dry lubricant to help this. Thule locks are designed to deter vandalism and theft but should not be considered theft proof. Remove valuable gear if your vehicle is unattended for an extended period. Place at least one key in the glove compartment.
- For safety to your vehicle and rack system, obey all posted speed limits and traffic cautions. Adapt your speed to the conditions of the road and the load being carried.
- Do not use Thule load carriers and accessories for purposes other than those for which they were designed. Do not exceed their carrying capacity. Failure to follow these guidelines or the product's instructions will void the warranty.
- All loads must be secured using the provided straps.
- Consult with your Thule dealer if you have any questions regarding the operations and limits of Thule products. Review all instructions and warranty information carefully.
- Not for use on trailers or towed vehicles.
- Not for offroad use.
- Keep bicycle tires away from hot exhaust.

ES = Latin American Spanish

DIRECTRICES PARA LOS PORTAEQUIPAJES THULE

Cuando use portacargas y accesorios Thule, debe asegurarse de entender todas las precauciones. Los puntos indicados a continuación le ayudarán a usar el sistema de bastidor y fomentarán su seguridad.

- Por seguridad y para obtener un ajuste correcto, use solamente el bastidor o accesorio Thule recomendado según en la Guía de ajuste Thule más actual. No suponga el ajuste del bastidor, siempre verifique la Guía de ajuste más actual cuando compre un nuevo vehículo.
- No debe excederse la carga máxima especificada en las instrucciones del conjunto. Sin embargo, este límite siempre depende de la carga máxima que recomienda el fabricante del automóvil. Siempre debe usarse la menor carga máxima recomendada. **Carga del techo máxima = peso del abrazadera de carga + cualquier accesorio del abrazadera + el peso de la carga.**
- Siempre asegúrese que las puertas del automóvil estén abiertas cuando monte un sistema de bastidor para techo. Cerciórese de que las perillas, los pernos, los tornillos, las correas y las cerraduras estén firmemente sujetos, apretados y asegurados con llave antes de cada viaje. Debe revisar periódicamente que las perillas, los pernos, los tornillos, las correas y los seguros no tengan señales de desgaste, corrosión o fatiga. Revise su carga en las paradas durante su viaje para garantizar la seguridad continua de la sujeción.
- Verifique las leyes estatales y locales que rigen la proyección de objetos más allá del ancho del vehículo. Esté al tanto de la anchura y altura de su carga, ya que las ramas, los puentes, los estacionamientos de baja altura pueden dañar su carga.Toda carga afectará el comportamiento de manejo del vehículo. Nunca conduzca con alguno de los seguros, las perillas o los bastidores abiertos o sin seguro. Todas las cargas largas, como tablas a vela, tablas de surf, kayacs, canoas y madera, deban atarse al frente y atrás los parachoques o ganchos de remolque del vehículo.
- Quite su bastidor y accesorios Thule cuando no se usen y antes de entrar a establecimientos para lavado automático de vehículos.
- Todas los seguros deben girarse y moverse periódicamente para garantizar que no se atasquen. Use grafito u otro lubricante en seco similar para este fin. Los seguros Thule están diseñados para disuadir el vandalismo y los robos. Saque todo equipo valioso si su vehiculo no tendrá vigilancia por largo tiempo.Ponga porlo menos una llave en la guantera.
- Como seguridad para su vehículo y sistema de bastidor, obedezca todos las límites de velocidad y avisos de tráfico. Adapte su velocidad a las condiciones del camino y de la carga transportada.
- No use portacargas y accesorios Thule con otra función para la que fue destinada. No exceda su capacidad de carga. Se anulará la garantia si no sigue estos lineamientos o las instrucciones del producto.
- Todas las cargas deben atarse con la correas incluídas.
- Consulte a su distribuidor Thule si tiene alguna pregunta sobre el funcionamiento y los límites de los productos Thule. Repase cuiadosamente todas las instrucciones y la de garantia.
- No use en tráilers o vehículos de remolque.
- No conduzca fuera del camino.
- Mantenga las ruedas de las bicicletas lejos del tubo de escape caliente.

THULE SWEDEN®

Thule Inc. • 42 Silvermine Road • Seymour, CT 06483
Thule Canada Inc. • 710 Bernard • Granby QC J2J 0H6
North American Consumer Service: Toll Free 800-238-2388 / Fax 450-777-3615 • www.thule.com

Register online at www.thule.com/warranty

FR = Canadian French

DIRECTIVES POUR SUPPORT THULE

Lorsque vous utilisez les supports et accessoires Thule pour voiture, vous devez observer les précautions suivantes. Les conseils ci-dessous visent à faciliter l'emploi de votre support et à l'utiliser en toute sécurité.

- Pour respecter les règles de sécurité et obtenir un ajustement de qualité, utilisez uniquementle le produit ou l'accessoire recommandé dans le guide d'achat Thule. Ne présumez pas qu'un produit sera adapté; consultez toujours ce guide d'achat lorsque vous achetez un nouveau véhicule.
- La charge maximale spécifiée dans les instructions d'assemblage ne doit pas être dépassée. Cependant, cette limite est toujours subordonnée à la charge maximale recommandée par le fabricant du véhicule. La charge maximale recommandée la plus basse s'applique toujours. **Charge de toit max = poids du porte-charges + tous les accessoires de porte-charges ajoutés + poids du chargement lui-même**
- Assurez-vous toujours que les portes de la voiture sont ouvertes lors de l'installation d'une support. Avant de prendre la route, assurez-vous que les molettes, les boulons et les vis sont bien serrés, les sangles bien attachées et les dispositifs de verrouillage fermés à clés. Examinez régulièrement ces éléments afin de déceler tout signe d'usure, de corrosion ou de fatigue. Vérifiez votre chargement à tous les arrêts pendant votre voyage pour vous assurer qu'il est bien fixé.
- Vérifiez les lois locales ou provinciales sur le dépassement d'objets sur les côtés d'un véhicule. Soyez conscient de la largeur et de la hauteur de votre chargement pour passer sous les branches basses, les ponts et les plafonds de stationnement couverts. Tout chargement modifie la tenue de route du véhicule. Ne conduisez jamais avec une serrure, une barre ou un écrou ouverts ou non bloqués. Tous les chargements longs, de type surfs, planches à voile, kayaks, canoës, bois, etc. doivent être attachés à l'avant et à arrière aux pare-chocs ou aux crochets de remorquage du véhicule.
- Retirez votre support et vos accessoires Thule lorsque vous ne les utilisez pas et avant de passer au lave-auto.
- Faites fonctionner régulièrement toutes les serrures afin qu'elles ne se coincent pas. Appliquez du graphite ou un lubrifiant sec pour conserver leur souplesse. Les antivols Thule sont conçus pour dissuader les voleurs et éviter les actes de vandalisme. Retirez tout matériel de valeur de votre véhicule s'il doit rester sans surveillance pendant une période prolongée. Gardez au moins une clé dans la boîte à gants.
- Pour protéger votre véhicule et votre support, respectez les vitesses limites et le code de la route. Adaptez votre vitesse aux conditions de la route et à la charge transportée.
- N'utilisez pas de support et d'accessoires Thule à d'autres fins que celles pour lesquelles ils ont été conçus. Ne dépassez pas leur capacité de charge maximale. Le non respect de ces consignes et des instructions spécifiques au produit annulera la garantie.
- Tout chargement doit être fixé en utilisant les sangles fournis.
- Consultez votre revendeur pour toute question sur le fonctionnement et les limites des produits Thule. Lisez attentivement toutes les instuctions et les informations de la garantie.
- Ne pas utiliser sur une remorque ou un véhicule remorqué.
- Ne pas utiliser pour la conduite hors route.
- Garder les pneus de vélo éloignés du tuyau d'échappement chaud.

PT = Brazilian Portuguese

DIRETRIZES PARA OS RACKS THULE

Ao utilizar os suportes de carga e acessórios Thule, o usuário deve compreender todas as precauções. Os pontos indicados em seguida ajudarão a usar o sistema de rack e incentivar a segurança.

- Para encaixes de qualidade e melhor segurança, use somente o rack recomendado ou o acessório indicado no Guia de Aplicação Thule. Não suponha que um rack encaixará, e sempre consulte o Guia de Aplicação atual quando adquirir um novo veículo.
- Não exceder a carga máxima especificada nas instruções de montagem. Entretanto, este limite é sempre restrito à carga máxima recomendada pelo fabricante do próprio veículo. Aplicar sempre cargas menores do que a carga máxima recomendada. **A carga máxima no teto = o peso do transportador de carga + o peso de todos os acessórios acoplados + o peso da própria carga.**
- Sempre se certifique de que todas as portas do veículo estejam abertas ao montar um sistema de rack de teto. Verifique se todos os botões de rosca, parafusos, amarras e travas estejam bem fixados, apertados e travados antes de cada viagem. Botões de rosca, parafusos, amarras e travas devem ser inspecionadas periodicamente por sinais de desgaste, corrosão e fadiga. Confira a sua carga nas paradas durante a viagem para garantir a segurança contínua da fixação.
- Consulte as leis estaduais e municipais que regem a projeção de objetos para fora do veículo. Tenha em mente, a largura e altura da sua carga já que locais de estacionamento, pontes e galhos baixos podem danificar a carga. Qualquer carga afeta a condução do veículo. Nunca dirija com qualquer trava, botão de rosca ou rack em posição aberta ou destravada. Todas as cargas longas como, mas sem limitação, pranchas de windsurfe, de surfe, caiaques, canoas e troncos devem ser amarrados nos para-choques dianteiros e traseiros ou aos ganchos de reboque do veículo.
- Remova o seu rack e acessórios quando não estiverem em uso e antes de entrar em lava-rápidos.
- Todas as travas devem ser viradas e movidas periodicamente para garantir uma operação suave. O uso de grafite ou lubrificantes secos ajudam a manter essa operação. As travas Thule são projetadas para desencorajar o vandalismo e furto, mas não devem ser consideradas à prova de furtos. Remova o equipamento valioso se o seu veículo ficar fora da sua supervisão por um período extenso. Coloque pelo menos uma das chaves no porta-luvas.
- Para a segurança do seu veículo e do sistema de rack, obedeça a todos os limites de velocidade e sinais de trânsito. Adapte a sua velocidade às condições da estrada e da carga transportada.
- Não use suportes e acessórios Thule para outra função à qual não foi destinada. Não exceda a capacidade de carga dos mesmos. A garantia será anulada se não seguir estas diretrizes ou as instruções do produto.
- Todas as cargas devem ser afixadas com as amarras fornecidas.
- Consulte o seu distribuidor Thule se tiver qualquer dúvida sobre a operação ou limites dos produtos Thule. Releia atentamente todas as instruções e informações de garantia.
- Não use em trailers ou veículos de reboque.
- Não use em situações fora da estrada (off-road).
- Mantenha os pneus de bicicleta longe do escapamento quente.

THULE SWEDEN®
Thule Inc. • 42 Silvermine Road • Seymour, CT 06483
Thule Canada Inc. • 710 Bernard • Granby QC J2J 0H6
North American Consumer Service: Toll Free 800-238-2388 / Fax 450-777-3615 • www.thule.com

Register online at www.thule.com/warranty

EN = North American English

THULE CAR RACK SYSTEMS LIMITED LIFETIME WARRANTY
[EFFECTIVE JANUARY 1, 2006]
Register online at www.thule.com/warranty

THULE will warranty all THULE brand car rack systems and its accessories manufactured by THULE during the time that an original retail purchaser owns the product. This warranty terminates if a purchaser transfers the product to any other person.

Subject to the limitations and exclusions described in this warranty, THULE will remedy defects in materials or workmanship by repairing or replacing, at its option, a defective product without charge for parts or labor. In addition, THULE may elect, at its option, not to repair or replace a defective product but rather issue to a purchaser a refund equal to the purchase price paid for the product or a credit to be used toward the purchase of a new THULE load carrier system.

No warranty is given for defects caused by normal wear and tear, cosmetic rust, scratches, accidents, unlawful vehicle operation, or modification of, or any types of repair of, a load carrier system other than those authorized by THULE.

No warranty is given for defects resulting from conditions beyond THULE's control including, but not limited to, misuse, overloading, or failure to assemble, mount or use the product in accordance with THULE's written instructions or guidelines included with the product or made available to the purchaser.

In the event that a product is defective, the purchaser should contact the THULE dealer from whom the product was purchased or an Authorized Thule Service Center. If the dealer or Authorized Thule Service Center is not able to correct the defect, the purchaser should contact THULE in writing or by phone using the contact information listed at the bottom of this page.

In the event that a product needs to be returned to THULE, a THULE technician at the address or telephone number listed below will provide the purchaser with the appropriate mailing address and any additional instructions. Please note that the purchaser will be responsible for the cost of mailing the product to THULE and that proof of purchase in the form of an original purchase invoice or receipt and a detailed description of the defect must be included in the mailing.

DISCLAIMER OF LIABILITY
REPAIR OR REPLACEMENT OF A DEFECTIVE PRODUCT OR THE ISSUANCE OF A REFUND OR CREDIT (AS DETERMINED BY THULE) IS A PURCHASER'S EXCLUSIVE REMEDY UNDER THIS WARRANTY. DAMAGE TO A PURCHASER'S VEHICLE, CARGO AND/OR TO ANY OTHER PERSON OR PROPERTY IS EXCLUDED.

THIS WARRANTY IS EXPRESSLY MADE IN LIEU OF ANY AND ALL OTHER WARRANTIES, EXPRESS OR IMPLIED, INCLUDING THE WARRANTIES OF MERCHANTABILITY AND FITNESS FOR A PARTICULAR PURPOSE.

THULE'S SOLE LIABILITY TO ANY PURCHASER IS LIMITED TO THE REMEDY SET FORTH ABOVE. IN NO EVENT WILL THULE BE LIABLE FOR ANY LOST PROFITS, LOST SALES, OR FOR ANY CONSEQUENTIAL, DIRECT, INDIRECT, INCIDENTAL, SPECIAL, EXEMPLARY, OR PUNITIVE DAMAGES OR FOR ANY OTHER DAMAGES OF ANY KIND OR NATURE.

SOME STATES DO NOT ALLOW THE EXCLUSION OR LIMITATION OF INCIDENTAL OR CONSEQUENTIAL DAMAGES, SO THE ABOVE LIMITATIONS MAY NOT BE APPLICABLE.

THIS WARRANTY GIVES YOU SPECIFIC LEGAL RIGHTS, AND YOU MAY ALSO HAVE OTHER RIGHTS WHICH VARY FROM STATE TO STATE.

ES = Latin American Spanish

GARANTÍA DE POR VIDA LIMITADA PARA LOS SISTEMAS PORTAEQUIPAJES PARA AUTOS THULE
[VIGENTE A PARTIR DEL 1.º DE ENERO DE 2006]
Regístrese en línea en www.thule.com/warranty

THULE garantizará todos los sistemas portacargas de la marca THULE y sus accesorios fabricados por THULE mientras el comprador original esté en posesión del producto. Esta garantía finaliza si un comprador transfiere el producto a cualquier otra persona.

Según las limitaciones y exclusiones que se describen en esta garantía, THULE remediará cualquier defecto en los materiales o la mano de obra reparando o reemplazando, a discreción propia, cualquier producto defectuoso sin cobrarle al propiedtario por las piedzas o la mano de obra. Además, THULE puede optar, a discreción propia, a no reparar o reemplazar un producto defectuoso y en su lugar devolver al comprador el dinero del precio que pagó por el producto o dotarle un crédito que puede usarse para comprar un nuevo sistema portacargas THULE.

No se otorga garantía alguna por los defectos causados por el uso y desgaste normales, la corrosión cosmética, las ralladuras, los accidentes o la conducción ilegal del vehículo, o cualquier modificación o reparación del sistema portacargas sin incluir aquellas modificaciones o reparaciones autorizadas por THULE.

No se otorga garantía alguna por los defectos que resulten de condiciones más allá del control de THULE que incluyen, pero no se limitan a, el uso indebido, la sobrecarga, la instalación, montaje o usos incorrectos del producto según las instrucciones o las directrices escritas de THULE adjuntas con el producto o que estén a disposición del comprador.

En caso que el producto presente defectos, el comprador deberá comunicarse con el vendedor THULE que se lo vendió, o con un Centro Autorizado de Servicio Thule. En caso que el vendedor o Centro Autorizado de Servicio Thule no puedan solucionar el defecto, el comprador deberá comunicarse por correo o teléfono con el servicio de información de THULE cuyos datos aparecen a pié de página.

En el caso de que el producto deba devolverse a THULE, un técnico de THULE en la dirección o número de teléfono indicados abajo le proporcionará una dirección postal donde enviarlo así como instrucciones adicionales. Por favor observe que el comprador será responsable de abonar el costo de enviar el producto THULE y que debe adjuntar una prueba de compra como una factura o un recibo original así como una descripción detallada del defecto.

DESCARGO DE RESPONSABILIDAD
BAJO ESTA GARANTÍA, LA ÚNICA SOLUCIÓN PARA EL COMPRADOR ES EL REEMPLAZO DEL PRODUCTO DEFECTUOSO, LA DEVOLUCIÓN DEL DINERO O DOTACIÓN DE CRÉDITO (SEGÚN LO DETERMINE THULE). SE EXCLUYEN LOS DAÑOS AL VEHÍCULO DEL COMPRADOR, A LA CARGA O A CUALQUIER OTRA PERSONA O PROPiedDAD.

ESTA GARANTÍA SE HACE DE FORMA EXPRESA EN VEZ DE CUALQUIER OTRA GARANTÍA, IMPLÍCITA O EXPLÍCITA, INCLUSO LAS GARANTÍAS DE COMERCIABILIDAD Y ADECUACIÓN PARA PROPÓSITOS CONCRETOS.

LA ÚNICA RESPONSABILIDAD DE THULE HACIA EL COMPRADOR SE LIMITA A LA SOLUCIÓN ESTABLECIDA ANTERIORMENTE. EN NINGÚN CASO SERÁ THULE RESPONSABLE DE NINGÚN BENEFICIO PERDIDO, VENTAS PERDIDAS O DE CUALQUIER DAÑO CONSECUENTE, DIRECTO, INDIRECTO, INCIDENTAL, ESPECIAL, EJEMPLAR O PUNITIVO DE CUALQUIER TIPO O ÍNDOLE.

ALGUNOS ESTADOS NO PERMITEN LA EXCLUSIÓN O LA LIMITACIÓN DE DAÑOS INCIDENTALES O CONSECUENTES, POR CONSIGUIENTE EN ESOS ESTADOS LAS LIMITACIONES ANTERIORES NO SON APLICABLES.

ESTA GARANTÍA LE OTORGA DERECHOS LEGALES ESPECÍFICOS Y USTED TAMBIÉN PUEDE TENER OTROS DERECHOS QUE VARÍAN DE UN ESTADO A OTRO.

THULE SWEDEN®
Thule Inc. • 42 Silvermine Road • Seymour, CT 06483
Thule Canada Inc. • 710 Bernard • Granby QC J2J 0H6
North American Consumer Service: Toll Free 800-238-2388 / Fax 450-777-3615 • www.thule.com

Register online at www.thule.com/warranty

FR = Canadian French

GARANTIE À VIE LIMITÉE SUR LES SYSTÈMES
DE SUPPORT POUR VOITURE THULE
(EN VIGUEUR LE 1ER JANVIER 2006)
Enregistrement en ligne à www.thule.com/warranty

THULE garantit tous les systèmes de support de la marque THULE pour voitures et ses accessoires fabriqués par THULE tant que le premier acheteur au détail est propriétaire du produit. Cette garantie prend fin si un acheteur transfert le produit à une autre personne.

Selon les limites et les exclusions décrites dans cette garantie, THULE remédiera aux défauts de matériaux ou de maind'oeuvre en réparant ou en remplaçant, à sa discrétion, un produit défectueux sans frais de pièces ou de main d'oeuvre. De plus, THULE peut décider, à sa discrétion, de ne pas réparer ou remplacer un produit défectueux, mais de rembourser à l'acheteur un montant égal à celui payé pour le produit, ou un crédit à utiliser pour l'achat d'un système de support de charge THULE neuf.

Aucune garantie n'est émise pour les défauts causés par une usure normale, pour la rouille esthétique, pour les rayures, pour l'utilisation inégale du véhicule, pour toute modification de celuici, pour tout type de réparation, pour un système de support de charge autre que ceux autorisés par THULE.

Aucune garantie n'est émise pour les défauts résultant de conditions hors du contrôle de THULE, notamment une mauvaise utilisation, une surcharge ou un assemblage ou montage non conformes aux instructions écrites ou directives de THULE incluses avec le produit ou mises à disposition de l'acheteur.

Dans le cas où un produit serait défectueux, l'acheteur doit contacter soit le revendeur THULE chez lequel le produit a été acheté, soit le centre de service après-vente Thule. Si le revendeur ou le centre de service après-vente Thule n'est pas en mesure de corriger le défaut, l'acheteur doit contacter Thule par écrit ou par téléphone (voir les coordonnées au bas de cette page).

Dans l'éventualité où un produit doit être renvoyé à THULE, un technicien THULE à l'adresse ou au numéro de téléphone indiqué ci-dessous fournira à l'acheteur l'adresse d'envoi appropriée et des instructions supplémentaires. Veuillez noter que l'acheteur sera responsable des frais d'envoi du produit à THULE et qu'une preuve d'achat sous la forme de l'original d'une facture ou d'un reçu d'achat et une description détaillée du défaut doivent être inclus dans l'envoi.

DÉNI DE RESPONSABILITÉ
LA RÉPARATION OU LE REMPLACEMENT D'UN PRODUIT DÉFECTUEUX OU ÉMISSION D'UN REMBOURSEMENT OU D'UN CRÉDIT (SELON LE CHOIX DE THULE) CONSTITUE LE RECOURS EXCLUSIF DE L'ACHETEUR SOUS CETTE GARANTIE. LES DOMMAGES AU VEHICULE DE L'ACHETEUR, AU CHARGEMENT OU/ET À TOUTE AUTRE PERSONNE OU BIEN SONT EXCLUS.

CETTE GARANTIE REMPLACE EXPRESSÉMENT TOUTES LES AUTRES GARANTIES EXPRESSES OU IMPLICITES Y COMPRIS TOUTE GARANTIE DE QUALITÉ MARCHANDE ET DE CONFORMITÉ À UN USAGE PARTICULIER.

LA SEULE RESPONSABILITÉ DE THULE ENVERS TOUT ACHETEUR EST LIMITÉE AU RECOURS DÉFINI CI-DESSUS. EN AUCUN CAS THULE NE PEUT ÊTRE TENU RESPONSABLE DES PERTES DE REVENUS, DE PERTES DE VENTES, DES DOMMAGES DIRECTS OU INDIRECTS, ACCESSOIRES, PARTICULIERS, SPÉCIAUX, INTÉRÊTS MAJORÉS OU PUNITIFS OU DE TOUT AUTRE DOMMAGE DE TOUT TYPE OU NATURE.

CERTAINS ÉTATS OU PROVINCES N'AUTORISENT PAS L'EXCLUSION OU LA LIMITATION DES DOMMAGES ACCESSOIRES OU INDIRECTS, LES LIMITATIONS DÉCRITES CI-DESSUS PEUVENT DONC NE PAS ÊTRE APPLICABLES.

CETTE GARANTIE VOUS DONNE DES DROITS SPÉCIFIQUES QUI PEUVENT VARIER D'UN ÉTAT OU PROVINCE À L'AUTRE.

PT = Brazilian Portuguese

GARANTIA PERMANENTE LIMITADA DOS SISTEMAS
DE RACKS THULE PARA CARROS
[EFETIVA A PARTIR DE 1º DE JANEIRO, 2006]
Registre-se on-line em www.thule.com/warranty

A THULE garantirá todos os sistemas de racks de automóveis da marca THULE e seus acessórios fabricados pela THULE enquanto o comprador original tiver a posse do produto. Esta garantia se encerra se um comprador transferir o produto a qualquer outra pessoa.

Sujeito às limitações e exclusões descritas nesta garantia, a THULE remediará qualquer defeito nos materiais ou de fabricação com a reparação ou substituição, a seu critério próprio, um produto defeituoso sem cobrar do proprietário pelas peças ou mão de obra. Além disso, a THULE pode optar, por critério próprio, não reparar ou substituir um produto defeituoso e, em vez disso, reembolsar a quantia igual ao preço pago pelo produto ou um crédito a ser usado para a compra de um novo sistema de suporte de carga THULE.

Não se outorga garantia por defeitos causados pelo uso e desgaste normal, corrosão cosmética, arranhões, acidentes, operação ilegal de veículo ou modificação, ou qualquer tipo de reparo, de um sistema de suporte de carga que não autorizado pela THULE.

Nenhuma garantia será concedida por defeitos que resultem de condições além do controle da THULE, incluindo, mas sem limitação, uso indevido, sobrecarga ou erro de instalação, montagem ou uso do produto de acordo com as diretrizes ou instruções por escrito da THULE incluídas com o produto ou disponibilizadas ao comprador.

Caso o produto apresente defeitos, o comprador deve entrar em contato com o distribuidor THULE onde o produto foi adquirido ou um Centro Autorizado de Serviço Thule. Se o distribuidor ou Centro Autorizado de Serviço Thule não for capaz de corrigir o defeito, o comprador deve entrar em contato com a THULE por escrito ou por telefone usando as informações de contato indicadas no canto inferior desta página.

Caso um produto precise ser devolvido para a THULE, um técnico da THULE, no endereço ou número de telefone indicado abaixo, fornecerá ao comprador o endereço apropriado de retorno e quaisquer instruções adicionais. Observe que o comprador será responsável pelo custo de enviar o produto para a THULE e que a prova de compra na forma da nota fiscal da compra original e uma descrição detalhada do defeito devem ser incluídas no pacote enviado.

ISENÇÃO DE RESPONSABILIDADE
O REPARO OU SUBSTITUIÇÃO DE UM PRODUTO DEFEITUOSO OU A EMISSÃO DE REEMBOLSO OU CRÉDITO (COMO DETERMINADO PELA THULE) É O RECURSO EXCLUSIVO DO COMPRADOR SOB ESTA GARANTIA. EXCLUEM-SE DANOS AO VEÍCULO DO COMPRADOR, A CARGA E/OU A OUTRA PESSOA OU PROPRIEDADE.

ESTA GARANTIA É FEITA EXPRESSAMENTE EM VEZ DE QUALQUER OUTRA GARANTIA, EXPRESSA OU IMPLÍCITA, INCLUINDO AS GARANTIAS DE COMERCIABILIDADE E ADEQUABILIDADE PARA PROPÓSITO PARTICULAR.

A ÚNICA RESPONSABILIDADE DA THULE PARA O COMPRADOR SE LIMITA À SOLUÇÃO ESTABELECIDA ANTERIORMENTE. SOB NENHUMA HIPÓTESE, A THULE SERÁ RESPONSÁVEL POR QUALQUER PERDA DE LUCROS OU DE VENDA, OU POR QUAISQUER DANOS CONSEQUENTES, DIRETOS, INDIRETOS, INCIDENTAIS, ESPECIAIS, EXEMPLARES OU PUNITIVOS OU POR OUTROS DANOS DE QUALQUER ESPÉCIE OU NATUREZA.

ALGUNS ESTADOS NÃO PERMITEM A EXCLUSÃO OU LIMITAÇÃO DE DANOS INCIDENTAIS OU CONSEQUENTES, ENTÃO AS LIMITAÇÕES ACIMA PODEM NÃO SER APLICÁVEIS.

ESTA GARANTIA CONCEDE A VOCÊ DIREITOS LEGAIS ESPECÍFICOS, E VOCÊ TAMBÉM PODE TER OUTROS DIREITOS QUE VARIAM DE UM ESTADO PARA OUTRO.

THULE SWEDEN®
Thule Inc. • 42 Silvermine Road • Seymour, CT 06483
Thule Canada Inc. • 710 Bernard • Granby QC J2J 0H6
North American Consumer Service: Toll Free 800-238-2388 / Fax 450-777-3615 • www.thule.com

Register online at www.thule.com/warranty

THULE REAR MOUNTED RACK FIT INFORMATION

1 *What is my vehicle's make, model and year?*

2 *What do I need in order to put a Thule rack on the back of my vehicle?*

ACURA

		BODY TYPE	TRUNK													BED				SPARE	FIT TIPS
			9001/9001XT/9001PRO RACEWAY 2	9002/9002XT/9002PRO RACEWAY 3	9003/9003XT/9003PRO RACEWAY PLATFORM	FIT DIAL SETTING	9009 / 9009XT ARCHWAY 2	9010 / 9010XT ARCHWAY 3	FIT DIAL SETTING	9006 / 9006XT GATEWAY 2	9007 / 9007XT GATEWAY 3	FIT DIAL SETTING	910XT PASSAGE 2	911XT PASSAGE 3	FIT DIAL SETTING	501 INSTA-GATER	822XT BEDRIDER	823PRO GATE-MATE (MEDIUM)	824PRO GATE-MATE (LARGE)	963PRO SPARE ME PRO	Read the appropriate numbered tips on the last page before fitting vehicle.
CL 2DR	'01-03	COUPE	✓	✓	✓	6	✓	✓	6	✓	✓	6	✓	✓	6						101,102,128
CL 2DR	'96-00	COUPE	✓	✓	✓	6	✓	✓	6	✓	✓	6	✓	✓	6						101,104,125,128
CSX 4DR (Canada)	'06-11	SEDAN	✓	✓	✓	7	✓	✓	7	✓	✓	7	✓	✓	7						101,102,128
EL 4DR	'01-06	SEDAN	✓	✓	✓	6	✓	✓	6	✓	✓	6	✓	✓	6						101,102,128
EL 4DR	'96-00	SEDAN	✓			6	✓		6	✓		6	✓		6						101,102
ILX 4DR	'13-19	SEDAN	✓	✓	✓	7	✓	✓	7	✓	✓	7	✓	✓	7						101,102,138
Integra 3DR	'94-01	HATCH	✓	✓	✓	6	✓	✓	6	✓	✓	6	✓	✓	6						101,105,125,128
Integra 4DR	'94-01	SEDAN	✓			5	✓		5	✓		5	✓		5						101,102,110,140
MDX	'17-19	SUV																			NO FIT,137
MDX	'14-16	SUV	✓			10	✓		10	✓		10	✓		10						101,102,121,128
MDX	'07-13	SUV																			137
MDX	'01-06	SUV	✓	✓	✓	9	✓	✓	9	✓	✓	9	✓	✓	9						101,102,121,127,128
RDX	'19	SUV																			NO FIT, 154
RDX	'13-18	SUV																			133
RDX	'07-12	SUV																			133
RL 4DR	'05-13	SEDAN	✓	✓	✓	7	✓	✓	7	✓	✓	7	✓	✓	7						101,102,128
RL 4DR	'96-04	SEDAN	✓			6	✓		6	✓		6	✓		6						101,110
RLX 4DR	'14-19	SEDAN	✓	✓	✓	8	✓	✓	8	✓	✓	8	✓	✓	8						101,102,113,128,129
RSX 3DR	'02-06	HATCH	✓	✓	✓	6	✓	✓	6	✓	✓	6	✓	✓	6						101,102,128
TL 4DR	'12-14	SEDAN	✓	✓	✓	7	✓	✓	7	✓	✓	7	✓	✓	7						101,102,128
TL 4DR	'09-11	SEDAN	✓	✓	✓	7	✓	✓	7	✓	✓	7	✓	✓	7						101,102,128
TL 4DR	'04-08	SEDAN	✓	✓	✓	7	✓	✓	7	✓	✓	7	✓	✓	7						101,102,128
TL 4DR	'99-03	SEDAN	✓	✓	✓	7	✓	✓	7	✓	✓	7	✓	✓	7						101,102,128
TLX 4DR	'15-19	SEDAN																			NO FIT,135
TSX 4DR	'09-14	SEDAN	✓	✓	✓	7	✓	✓	7	✓	✓	7	✓	✓	7						101,102,128
TSX 4DR	'04-08	SEDAN	✓	✓	✓	7	✓	✓	7	✓	✓	7	✓	✓	7						101,102,128
TSX Sport Wagon	'11-14	WAGON																			NO FIT,133
ZDX	'10-13	SPORTBACK	✓	✓	✓	8	✓	✓	8	✓	✓	8	✓	✓	8						101,102,121,138

ALFA ROMEO

Giulia	'17-19	SEDAN	✓			7															101,102,138
Stelvio	'17-19	SUV																			NO FIT, 154

AUDI

A3 4DR	'14-19	SEDAN	✓	✓	✓	7	✓	✓	7	✓	✓	7	✓	✓	7						101,102,116,128
A3 Sportback 5DR	'06-19	SPORTBACK	✓	✓	✓	8	✓	✓	8	✓	✓	8	✓	✓	8						101,102,128
A4 2DR	'17-19	CONVERTIBLE																			NO FIT
A4 2DR	'09-16	CONVERTIBLE																			NO FIT
A4 2DR	'02-08	CONVERTIBLE																			NO FIT
A4 4DR	'17-19	SEDAN	✓	✓	✓	6	✓	✓	6	✓	✓	6	✓	✓	6						101,102,116,128
A4 4DR	'09-16	SEDAN	✓	✓	✓	6	✓	✓	6	✓	✓	6	✓	✓	6						101,102,116,128
A4 4DR	'02-08	SEDAN	✓	✓	✓	6	✓	✓	6	✓	✓	6	✓	✓	6						101,102,116,128
A4 4DR	'95-01	SEDAN	✓	✓	✓	6	✓	✓	6	✓	✓	6	✓	✓	6						101,102,138
A4 Allroad	'13-19	WAGON	✓	✓	✓	9	✓	✓	9	✓	✓	9	✓	✓	9						101,102,121,128
A4 Allroad	'01-05	WAGON	✓	✓	✓	9	✓	✓	9	✓	✓	9	✓	✓	9						101,102,121,128
A4 (Avant) Wagon	'09-12	WAGON	✓	✓	✓	9	✓	✓	9	✓	✓	9	✓	✓	9						101,102,121,128
A4 (Avant) Wagon	'02-08	WAGON	✓	✓	✓	9	✓	✓	9	✓	✓	9	✓	✓	9						101,102,121,128
A4 (Avant) Wagon	'97-01	WAGON	✓	✓	✓	9	✓	✓	9	✓	✓	9	✓	✓	9						101,102,121,128
A5 2DR	'18-19	COUPE	✓			7															101,102,138

506-7250_01

NOTE: THULE STRAP RACKS HAVE BEEN DESIGNED TO FIT VEHICLES WITH STANDARD **FACTORY INSTALLED** SPOILERS, UNLESS OTHERWISE SPECIFIED.
PLEASE NOTE, THULE CANNOT BE RESPONSIBLE FOR FITS ON VEHICLES WITH AFTERMARKET SPOILERS.

THULE REAR MOUNTED RACK FIT INFORMATION

1 *What is my vehicle's make, model and year?*

2 *What do I need in order to put a Thule rack on the back of my vehicle?*

AUDI continued

		BODY TYPE	TRUNK													BED				SPARE	FIT TIPS
			9001/9001XT/9001PRO RACEWAY 2	9002/9002XT/9002PRO RACEWAY 3	9003/9003XT/9003PRO RACEWAY PLATFORM	FIT DIAL SETTING	9009 / 9009XT ARCHWAY 2	9010 / 9010XT ARCHWAY 3	FIT DIAL SETTING	9006 / 9006XT GATEWAY 2	9007 / 9007XT GATEWAY 3	FIT DIAL SETTING	910XT PASSAGE 2	911XT PASSAGE 3	FIT DIAL SETTING	501 INSTA-GATER	822XT BEDRIDER	823PRO GATE-MATE (MEDIUM)	824PRO GATE-MATE (LARGE)	963PRO SPARE ME PRO	Read the appropriate numbered tips on the last page before fitting vehicle.
A5 2DR	'08-17	COUPE	✓			7															101,102,138
A5 Sportback 4DR	'18-19	COUPE																			NO FIT
A6 4DR	'12-18	SEDAN	✓	✓	✓	6	✓	✓	6	✓	✓	6	✓	✓	6						101,102,138
A6 4DR	'05-11	SEDAN	✓	✓	✓	6	✓	✓	6	✓	✓	6	✓	✓	6						101,102,138
A6 4DR	'98-04	SEDAN	✓	✓	✓	6	✓	✓	6	✓	✓	6	✓	✓	6						101,102,138
A6 Wagon	'06-11	WAGON	✓	✓	✓	9	✓	✓	9	✓	✓	9	✓	✓	9						101,102,121,128
A6 Wagon	'99-05	WAGON	✓	✓	✓	9	✓	✓	9	✓	✓	9	✓	✓	9						101,102,121,128
A7 Sportback	'12-18	SPORTBACK																			NO FIT,157
A8	'11-18	SEDAN	✓	✓	✓	7	✓	✓	7	✓	✓	7	✓	✓	7						101,102,128
A8	'04-10	SEDAN	✓	✓	✓	7	✓	✓	7	✓	✓	7	✓	✓	7						101,102,128
A8	'96-03	SEDAN																			135
Q3	'15-19	SUV																			NO FIT,135
Q5	'18-19	SUV																			NO FIT,137
Q5	'09-17	SUV																			134
Q7	'17-19	SUV																			134
Q7	'07-15	SUV																			134
RS4 4DR	'09-14	SEDAN	✓	✓	✓	6	✓	✓	6	✓	✓	6	✓	✓	6						101,102,116,128
RS4 4DR	'04-08	SEDAN	✓	✓	✓	6	✓	✓	6	✓	✓	6	✓	✓	6						101,102,116,128
RS7 Sportback	'12-14	SPORTBACK																			NO FIT,157
S3 4DR	'14-19	SEDAN	✓	✓	✓	7	✓	✓	7	✓	✓	7	✓	✓	7						101,102,116,128
S4 4DR	'17-19	SEDAN	✓	✓	✓	6	✓	✓	6	✓	✓	6	✓	✓	6						101,102,116,128
S4 4DR	'09-16	SEDAN	✓	✓	✓	6	✓	✓	6	✓	✓	6	✓	✓	6						101,102,116,128
S4 4DR	'02-08	SEDAN	✓	✓	✓	6	✓	✓	6	✓	✓	6	✓	✓	6						101,102,116,128
S4 4DR	'95-01	SEDAN	✓	✓	✓	6	✓	✓	6	✓	✓	6	✓	✓	6						101,102,138
S4 Wagon	'01-08	WAGON	✓	✓	✓	9	✓	✓	9	✓	✓	9	✓	✓	9						101,102,121,128
S5 2DR	'17-19	COUPE																			NO FIT,135
S5 2DR	'08-16	COUPE	✓	✓	✓	7	✓	✓	7	✓	✓	7	✓	✓	7						101,102,138
S5 Sportback 4DR	'19	COUPE																			NO FIT
S6 4DR	'12-18	SEDAN	✓	✓	✓	6	✓	✓	6	✓	✓	6	✓	✓	6						101,102,138
S6 4DR	'05-11	SEDAN	✓	✓	✓	6	✓	✓	6	✓	✓	6	✓	✓	6						101,102,138
S6 4DR	'98-04	SEDAN	✓	✓	✓	6	✓	✓	6	✓	✓	6	✓	✓	6						101,102,138
S6 Wagon	'02-03	WAGON	✓	✓	✓	9	✓	✓	9	✓	✓	9	✓	✓	9						101,102,121,128
S7 Sportback	'12-18	SPORTBACK																			NO FIT,157
S8 4DR	'11-18	SEDAN	✓	✓	✓	7	✓	✓	7	✓	✓	7	✓	✓	7						101,102,128
S8 4DR	'04-10	SEDAN	✓	✓	✓	7	✓	✓	7	✓	✓	7	✓	✓	7						101,102,128
S8 4DR	'01-03	SEDAN																			135
TT	'07-19	COUPE																			133
TT	'00-06	COUPE																			133

BMW

1 Series 2DR	'08-13	COUPE					✓		7	✓		7	✓		7						101,102,128
1 Series 2DR Convertible	'08-13	CONVERTIBLE					✓		7	✓		7	✓		7						101,102,128,156
2 Series 2DR	'14-19	COUPE	✓			7	✓		7	✓		7	✓		7						101,102,113,128
2 Series 2DR Convertible	'14-19	CONVERTIBLE	✓			6	✓		6	✓		6	✓		6						101,102,113,128,156
3 Series 2DR	'06-13	COUPE	✓			7	✓		7	✓		7	✓		7						101,102,128
3 Series 2DR	'00-05	COUPE	✓	✓	✓	7	✓	✓	7	✓	✓	7	✓	✓	7						101,102,128
3 Series 2DR Convertible	'06-13	CONVERTIBLE					✓		7	✓		7	✓		7						101,102,128,156
3 Series 2DR Convertible	'00-05	CONVERTIBLE																			NO FIT

506-7250_01

NOTE: THULE STRAP RACKS HAVE BEEN DESIGNED TO FIT VEHICLES WITH STANDARD **FACTORY INSTALLED** SPOILERS, UNLESS OTHERWISE SPECIFIED.
PLEASE NOTE, THULE CANNOT BE RESPONSIBLE FOR FITS ON VEHICLES WITH AFTERMARKET SPOILERS.

THULE REAR MOUNTED RACK FIT INFORMATION

1 *What is my vehicle's make, model and year?*

2 *What do I need in order to put a Thule rack on the back of my vehicle?*

BMW continued

		BODY TYPE	TRUNK													BED				SPARE	FIT TIPS
			9001/9001XT/9001PRO RACEWAY 2	9002/9002XT/9002PRO RACEWAY 3	9003/9003XT/9003PRO RACEWAY PLATFORM	FIT DIAL SETTING	9009 / 9009XT ARCHWAY 2	9010 / 9010XT ARCHWAY 3	FIT DIAL SETTING	9006 / 9006XT GATEWAY 2	9007 / 9007XT GATEWAY 3	FIT DIAL SETTING	910XT PASSAGE 2	911XT PASSAGE 3	FIT DIAL SETTING	501 INSTA-GATER	822XT BEDRIDER	823PRO GATE-MATE (MEDIUM)	824PRO GATE-MATE (LARGE)	963PRO SPARE ME PRO	Read the appropriate numbered tips on the last page before fitting vehicle.
3 Series 4DR	'12-19	SEDAN	✓			7	✓		7	✓		7	✓		7						101,102,128,
3 Series 4DR	'06-11	SEDAN	✓			7	✓		7	✓		7	✓		7						101,102,128,
3 Series 4DR	'99-05	SEDAN	✓	✓	✓	6	✓	✓	6	✓	✓	6	✓	✓	6						101,102,138
3 Series Gran Turismo 5DR	'13-16	SPORTBACK																			133
3 Series Wagon	'11-16	WAGON	✓			9	✓		9	✓		9	✓		9						101,102,121,128
3 Series Wagon	'00-10	WAGON	✓			9	✓		9	✓		9	✓		9						101,102,121,128
4 Series 2DR	'14-19	COUPE	✓			7	✓		7	✓		7	✓		7						101,102,128
5 Series 4DR	'17-19	SEDAN	✓			7	✓		7	✓		7	✓		7						101,102,138
5 Series 4DR	'11-16	SEDAN	✓	✓	✓	8	✓	✓	8	✓	✓	8	✓	✓	8						101,102,128
5 Series 4DR	'04-10	SEDAN	✓	✓	✓	8	✓	✓	8	✓	✓	8	✓	✓	8						101,102,128
5 Series 4DR	'97-03	SEDAN	✓	✓	✓	5	✓	✓	5	✓	✓	5	✓	✓	5						101,102,138
5 Series Gran Turismo 5DR	'10-16	SPORTBACK																			133
5 Series Wagon	'11-16	WAGON	✓			8	✓		8	✓		8	✓		8						101,102,121,128
5 Series Wagon	'04-10	WAGON	✓			8	✓		8	✓		8	✓		8						101,102,121,128
5 Series Wagon	'99-03	WAGON	✓			8	✓		8	✓		8	✓		8						101,102,121,128
6 Series 2DR	'11-19	COUPE																			CHECK FOR UPDATE
6 Series 2DR	'04-10	COUPE	✓	✓	✓	6	✓	✓	7	✓	✓	7	✓	✓	7						101,102,128
6 Series 2DR Convertible	'11-19	CONVERTIBLE					✓		7	✓		7	✓		7						101,102,128,156
6 Series 2DR Convertible	'04-10	CONVERTIBLE	✓	✓	✓	6	✓	✓	7	✓	✓	7	✓	✓	7						101,102,128,156
6 Series Gran Coupe 4DR	'14-19																				NO FIT,133
7 Series 4DR	'16-19	SEDAN																			NO FIT, 133
7 Series 4DR	'02-15	SEDAN	✓	✓	✓	7	✓	✓	7	✓	✓	7	✓	✓	7						101,102,128
7 Series 4DR	'95-01	SEDAN																			133
i3	'14-19	HATCH																			NO FIT,135
X1	'11-19	SUV	✓	✓	✓	9	✓	✓	9	✓	✓	9	✓	✓	9						101,102,113,121,138
X2	'18-19	SUV																			NO FIT, 137
X3	'18-19	SUV																			134
X3	'11-17	SUV																			134
X3	'04-10	SUV																			134
X4	'15-19	SUV	✓			7	✓		7	✓		7	✓		7						101,102,138,155
X5	'19	SUV																			NO FIT, 154
X5	'14-18	SUV					✓	✓	8	✓	✓	8	✓	✓	8						101,102,121,138
X5	'07-13	SUV					✓	✓	8	✓	✓	8	✓	✓	8						101,102,121,138
X5	'00-06	SUV																			135,137
X6	'09-19	SUV	✓	✓	✓	8	✓	✓	8	✓	✓	8	✓	✓	8						101,102,121,138
X7	'19	SUV																			CHECK FOR UPDATE
Z3	'96-02	CONVERTIBLE																			133
Z4	'03-16	CONVERTIBLE																			133
Z8	'00-03	CONVERTIBLE																			135

BUICK

Allure (Canada)	'10	SEDAN	✓			6	✓		6	✓		6	✓		6						101,102,116,128
Allure (Canada)	'05-09	SEDAN	✓			6	✓		6	✓		6	✓		6						101,102,116,128
Cascada	'16-19	CONVERTIBLE																			NO FIT
Century 4DR	'97-05	SEDAN	✓			6	✓		6	✓		6	✓		6						101,105,125,138
Enclave	'18-19	SUV																			NO FIT, 154
Enclave	'08-17	SUV	✓	✓	✓	9	✓	✓	9	✓	✓	9	✓	✓	9						101,102,121,128
Encore	'13-19	SUV	✓	✓	✓	8	✓	✓	8	✓	✓	8	✓	✓	8						101,102,121,128

FIT TIPS

506-7250_01

NOTE: THULE STRAP RACKS HAVE BEEN DESIGNED TO FIT VEHICLES WITH STANDARD **FACTORY INSTALLED** SPOILERS, UNLESS OTHERWISE SPECIFIED.
PLEASE NOTE, THULE CANNOT BE RESPONSIBLE FOR FITS ON VEHICLES WITH AFTERMARKET SPOILERS.

THULE REAR MOUNTED RACK FIT INFORMATION

1 *What is my vehicle's make, model and year?*

2 *What do I need in order to put a Thule rack on the back of my vehicle?*

BUICK continued

		BODY TYPE	TRUNK													BED				SPARE	FIT TIPS
			9001/9001XT/9001PRO RACEWAY 2	9002/9002XT/9002PRO RACEWAY 3	9003/9003XT/9003PRO RACEWAY PLATFORM	FIT DIAL SETTING	9009 / 9009XT ARCHWAY 2	9010 / 9010XT ARCHWAY 3	FIT DIAL SETTING	9006 / 9006XT GATEWAY 2	9007 / 9007XT GATEWAY 3	FIT DIAL SETTING	910XT PASSAGE 2	911XT PASSAGE 3	FIT DIAL SETTING	501 INSTA-GATER	822XT BEDRIDER	823PRO GATE-MATE (MEDIUM)	824PRO GATE-MATE (LARGE)	963PRO SPARE ME PRO	Read the appropriate numbered tips on the last page before fitting vehicle.
Envision	'17-19	SUV	✓	✓	✓	9	✓	✓	9	✓	✓	9	✓	✓	9						101,102,121,128
LaCrosse	'17-19	SEDAN	✓	✓	✓	7	✓	✓	7	✓	✓	7	✓	✓	7						101,102,128
LaCrosse	'10-16	SEDAN	✓			6	✓		6	✓		6	✓		6						101,102,116,128
LaCrosse	'05-09	SEDAN	✓			6	✓		6	✓		6	✓		6						101,102,116,128
LeSabre 4DR	'00-05	SEDAN	✓	✓	✓	5	✓	✓	5	✓	✓	5	✓	✓	5						101,138,142
Lucerne	'06-11	SEDAN	✓	✓	✓	8	✓	✓	8	✓	✓	8	✓	✓	8						101,102,128
Park Avenue 4DR	'97-05	SEDAN	✓	✓	✓	6	✓	✓	6	✓	✓	6	✓	✓	6						101,138,142
Ranier	'04-07	SUV																			135,137
Regal 4DR	'10-17	SEDAN	✓	✓	✓	7	✓	✓	7	✓	✓	7	✓	✓	7						101,102,113,128
Regal 4DR	'97-04	SEDAN																			135
Regal Sportback	'18-19	HATCH																			NO FIT, 137
Regal TourX	'18-19	WAGON																			NO FIT, 154
Rendezvous	'02-07	SUV	✓			10	✓		10	✓		10	✓		10						101,112,121,125,138
Terraza	'05-07	SUV	✓	✓	✓	11	✓	✓	11	✓	✓	11	✓	✓	11						101,102,121,128
Verano 4DR	'12-17	SEDAN	✓	✓	✓	7	✓	✓	7	✓	✓	7	✓	✓	7						101,102,128

CADILLAC

ATS 4DR	'13-19	SEDAN	✓	✓	✓	7	✓	✓	7	✓	✓	7	✓	✓	7						101,102,128
Catera 4DR	'97-01	SEDAN	✓	✓	✓	6	✓	✓	6	✓	✓	6	✓	✓	6						101,105,125,128
CT6 4DR	'16-19	SEDAN																			NO FIT
CTS 2DR	'10-14	COUPE																			133
CTS 4DR	'14-19	SEDAN	✓	✓	✓	7	✓	✓	7	✓	✓	7	✓	✓	7						101,102,128
CTS 4DR	'10-13	SEDAN	✓			8	✓		7	✓		7	✓		7						101,102,141
CTS 4DR	'03-09	SEDAN	✓	✓	✓	8	✓	✓	7	✓	✓	7	✓	✓	7						101,102,141
CTS Sport Wagon 5DR	'10-14	WAGON																			133
DeVille 4DR	'00-05	SEDAN	✓	✓	✓	7	✓	✓	7	✓	✓	7	✓	✓	7						101,102,128
DTS 4DR	'06-11	SEDAN	✓	✓	✓	7	✓	✓	7	✓	✓	7	✓	✓	7						101,102,128
Eldorado 2DR	'94-02	COUPE																			133
ELR 2DR	'14-16	COUPE	✓	✓		8	✓	✓	8	✓	✓	8	✓	✓	8						101,102,128
Escalade	'15-19	SUV																			NO FIT,154
Escalade	'07-14	SUV																			134
Escalade	'01-06	SUV	✓			10	✓		10	✓		10	✓		10						101,106,121,138
Escalade	'99-00	SUV	✓			10	✓		10	✓		10	✓		10						101,106,121,138
Escalade ESV	'15-19	SUV																			NO FIT,154
Escalade ESV	'07-14	SUV																			134
Escalade ESV	'03-06	SUV																			134,137
Escalade EXT	'02-13	TRUCK																✓			153
Seville 4DR	'98-03	SEDAN																			135
Seville STS 4DR	'98-03	SEDAN																			135
SRX	'10-16	SUV																			NO FIT,137
SRX	'04-09	SUV	✓	✓	✓	10	✓	✓	10	✓	✓	10	✓	✓	10						101,102,121,128,129
STS 4DR	'05-11	SEDAN																			135
XLR	'04-09	CONVERTIBLE																			135,137
XT4	'19	SUV																			CHECK FOR UPDATE
XT5	'17-19	SUV																			NO FIT, 154
XTS 4DR	'13-19	SEDAN																			NO FIT, 135

506-7250_01

NOTE: THULE STRAP RACKS HAVE BEEN DESIGNED TO FIT VEHICLES WITH STANDARD **FACTORY INSTALLED** SPOILERS, UNLESS OTHERWISE SPECIFIED.
PLEASE NOTE, THULE CANNOT BE RESPONSIBLE FOR FITS ON VEHICLES WITH AFTERMARKET SPOILERS.

THULE REAR MOUNTED RACK FIT INFORMATION

1 *What is my vehicle's make, model and year?*

2 *What do I need in order to put a Thule rack on the back of my vehicle?*

CHEVROLET		BODY TYPE	TRUNK													BED				SPARE	FIT TIPS
			9001/9001XT/9001PRO RACEWAY 2	9002/9002XT/9002PRO RACEWAY 3	9003/9003XT/9003PRO RACEWAY PLATFORM	FIT DIAL SETTING	9009 / 9009XT ARCHWAY 2	9010 / 9010XT ARCHWAY 3	FIT DIAL SETTING	9006 / 9006XT GATEWAY 2	9007 / 9007XT GATEWAY 3	FIT DIAL SETTING	910XT PASSAGE 2	911XT PASSAGE 3	FIT DIAL SETTING	501 INSTA-GATER	822XT BEDRIDER	823PRO GATE-MATE (MEDIUM)	824PRO GATE-MATE (LARGE)	963PRO SPARE ME PRO	Read the appropriate numbered tips on the last page before fitting vehicle.
Astro Van	'90-05	VAN																			137
Avalanche	'02-13	TRUCK														✓		✓			148
Aveo 4DR	'07-11	SEDAN	✓			7	✓		7	✓		7	✓		7						101,102,128
Aveo 4DR	'04-06	SEDAN	✓			8	✓		8	✓		8	✓		8						101,128,147
Aveo 5DR	'07-11	HATCH	✓			9	✓		9	✓		9	✓		9						101,128,147
Aveo 5DR	'04-06	HATCH	✓			10	✓		10	✓		10	✓		10						101,128,147
Blazer 2DR	'95-05	SUV																		✓	
Blazer 4DR	'95-02	SUV																		✓	
Bolt EV	'17-19	HATCH																			NO FIT, 154
Camaro	'16-19	COUPE																			146
Camaro	'10-15	COUPE																			134
Camaro	'93-02	COUPE																			134
Captiva	'11-15	SUV																			134
Cavalier 2DR	'95-04	COUPE	✓			7	✓		7	✓		7	✓		7						101,142
Cavalier 4DR	'95-04	SEDAN	✓			7	✓		7	✓		7	✓		7						101,142
City Express	'15-18	VAN																			137
Cobalt 2DR	'05-10	COUPE	✓	✓	✓	7	✓	✓	7	✓	✓	7	✓	✓	7						101,102,128
Cobalt 4DR	'05-10	SEDAN	✓	✓	✓	7	✓	✓	7	✓	✓	7	✓	✓	7						101,110,128
Colorado	'15-19	TRUCK															✓	✓			153
Colorado	'04-12	TRUCK															✓	✓			153
Corvette	'05-19	CONVERTIBLE																			134
Corvette	'99-04	CONVERTIBLE																			134
Cruze 4DR	'16-19	SEDAN	✓			7	✓		7	✓		7	✓		7						101,102,128
Cruze 4DR	'11-15	SEDAN	✓	✓	✓	7	✓	✓	7	✓	✓	7	✓	✓	7						101,102,128
Cruze Limited 4DR	'16	SEDAN	✓	✓	✓	7	✓	✓	7	✓	✓	7	✓	✓	7						101,102,128
Cruze Eco 4DR	'11-16	SEDAN	✓	✓	✓	7	✓	✓	7	✓	✓	7	✓	✓	7						101,102,128
Cruze 5DR	'17-19	HATCH	✓			8	✓		8	✓		8	✓		8						101,102,121,128
Equinox	'18-19	SUV																			NO FIT,135
Equinox	'10-17	SUV	✓	✓	✓	9	✓	✓	9	✓	✓	9	✓	✓	9						101,112,121,138
Equinox	'05-09	SUV	✓	✓	✓	9	✓	✓	9	✓	✓	9	✓	✓	9						101,112,121,138
Express Vans / Vans	'79-16	VAN																			137
HHR	'06-11	WAGON	✓	✓	✓	11	✓	✓	11	✓	✓	11	✓	✓	11						101,102,121,128
Impala	'14-19	SEDAN	✓	✓	✓	8	✓	✓	8	✓	✓	8	✓	✓	8						101,102,116,128
Impala	'06-13	SEDAN	✓	✓	✓	7	✓	✓	7	✓	✓	7	✓	✓	7						101,102,128
Impala	'00-05	SEDAN	✓	✓	✓	6	✓	✓	6	✓	✓	6	✓	✓	6						101,116,128,142
Lumina 4DR	'90-01	SEDAN	✓	✓	✓	6	✓	✓	6	✓	✓	6	✓	✓	6						101,108
Malibu 4DR	'16-19	SEDAN	✓	✓	✓	7	✓	✓	7	✓	✓	7	✓	✓	7						101,102,116,128
Malibu 4DR	'13-15	SEDAN	✓	✓	✓	7	✓	✓	7	✓	✓	7	✓	✓	7						101,102,127,128
Malibu 4DR	'08-12	SEDAN	✓	✓	✓	7	✓	✓	7	✓	✓	7	✓	✓	7						101,102,127,128
Malibu 4DR	'04-07	SEDAN	✓	✓	✓	7	✓	✓	7	✓	✓	7	✓	✓	7						101,102,128
Malibu 4DR	'97-03	SEDAN	✓			6	✓		6	✓		6	✓		6						101,102,116,125,128,129
Malibu Maxx Wagon	'04-07	WAGON	✓	✓	✓	8	✓	✓	8	✓	✓	8	✓	✓	8						101,102,128
Metro 3DR	'98-01	HATCH	✓			8	✓		8	✓		8	✓		8						101,102
Metro 4DR	'98-01	SEDAN	✓			6	✓		6	✓		6	✓		6						101,102,140
Monte Carlo 2DR	'06-07	COUPE	✓	✓	✓	7	✓	✓	7	✓	✓	7	✓	✓	7						101,102,128
Monte Carlo 2DR	'00-05	COUPE	✓	✓	✓	6	✓	✓	6	✓	✓	6	✓	✓	6						101,102,128
Optra 4DR (Canada)	'05-08	SEDAN																			135
Optra Wagon (Canada)	'05-08	WAGON	✓	✓	✓	8	✓	✓	8	✓	✓	8	✓	✓	8						101,102,128

506-7250_01

NOTE: THULE STRAP RACKS HAVE BEEN DESIGNED TO FIT VEHICLES WITH STANDARD **FACTORY INSTALLED** SPOILERS, UNLESS OTHERWISE SPECIFIED.
PLEASE NOTE, THULE CANNOT BE RESPONSIBLE FOR FITS ON VEHICLES WITH AFTERMARKET SPOILERS.

THULE REAR MOUNTED RACK FIT INFORMATION

1 *What is my vehicle's make, model and year?*

2 *What do I need in order to put a Thule rack on the back of my vehicle?*

CHEVROLET continued

		BODY TYPE	TRUNK													BED				SPARE	FIT TIPS
			9001/9001XT/9001PRO RACEWAY 2	9002/9002XT/9002PRO RACEWAY 3	9003/9003XT/9003PRO RACEWAY PLATFORM	FIT DIAL SETTING	9009 / 9009XT ARCHWAY 2	9010 / 9010XT ARCHWAY 3	FIT DIAL SETTING	9006 / 9006XT GATEWAY 2	9007 / 9007XT GATEWAY 3	FIT DIAL SETTING	910XT PASSAGE 2	911XT PASSAGE 3	FIT DIAL SETTING	501 INSTA-GATER	822XT BEDRIDER	823PRO GATE-MATE (MEDIUM)	824PRO GATE-MATE (LARGE)	963PRO SPARE ME PRO	Read the appropriate numbered tips on the last page before fitting vehicle.
Orlando 5DR (Canada)	'12-15	SUV	✓	✓	✓	10	✓	✓	10	✓	✓	10	✓	✓	10						101,102,113,121,128
Prizm 4DR	'98-02	SEDAN	✓			7	✓		7	✓		7	✓		7						101,102,116,128
S-10	'94-03	TRUCK														✓	✓	✓			148
Silverado 1500	'19	TRUCK														✓	✓		✓		148
Silverado 1500	'14-18	TRUCK														✓	✓		✓		148
Silverado 1500	'07-13	TRUCK														✓	✓		✓		148
Silverado 2500/3500/HD	'15-19	TRUCK														✓	✓		✓		148
Silverado 2500/3500/HD	'07-14	TRUCK														✓	✓		✓		148
Silverado / Silverado Classic	'99-07	TRUCK														✓	✓		✓		148
Sonic 4DR	'12-19	SEDAN	✓	✓	✓	7	✓	✓	7	✓	✓	7	✓	✓	7						101,102,128
Sonic 5DR	'12-19	HATCH	✓	✓		8	✓	✓	9	✓	✓	9	✓	✓	9						101,102,128
Spark 5DR	'13-19	HATCH	✓	✓		8	✓	✓	9	✓	✓	9	✓	✓	9						101,102,128
SS 4DR	'14-17	SEDAN																			CHECK FOR UPDATE
Suburban	'15-19	SUV																			NO FIT,154
Suburban	'07-14	SUV																			134
Suburban	'00-06	SUV	✓			10	✓		10	✓		10	✓		10						101,106,121,138
Tahoe 4DR	'15-19	SUV																			NO FIT,154
Tahoe 4DR	'07-14	SUV																			134
Tahoe 4DR	'00-06	SUV	✓			10	✓		10	✓		10	✓		10						101,106,121,138
Tracker	'99-04	SUV																		✓	
Trax (Canada)	'13-17	SUV	✓	✓	✓	8	✓	✓	8	✓	✓	8	✓	✓	8						101,102,121,128
TrailBlazer 4DR	'02-09	SUV																			135,137
TrailBlazer EXT 4DR	'02-06	SUV																			135,137
Traverse	'18-19	SUV																			NO FIT,154
Traverse	'09-17	SUV	✓	✓	✓	9	✓	✓	9	✓	✓	9	✓	✓	9						101,102,121,128
Uplander	'05-08	VAN	✓	✓	✓	11	✓	✓	11	✓	✓	11	✓	✓	11						101,102,121,128
Venture	'97-04	VAN	✓	✓	✓	10	✓	✓	10	✓	✓	10	✓	✓	10						101,106,121,138
Volt	'16-19	SEDAN																			NO FIT,137
Volt	'11-15	SEDAN	✓	✓		8	✓	✓	8	✓	✓	8	✓	✓	8						101,102,128

CHRYSLER

200 4DR	'15-17	SEDAN	✓			7	✓		7	✓		7	✓		7						101,102,128
200 4DR	'11-14	SEDAN	✓	✓	✓	7	✓	✓	7	✓	✓	7	✓	✓	7						101,102,128
300	'11-19	SEDAN	✓	✓	✓	7	✓	✓	7	✓	✓	7	✓	✓	7						101,102,128
300	'05-10	SEDAN	✓	✓	✓	7	✓	✓	7	✓	✓	7	✓	✓	7						101,102,128
300M	'98-04	SEDAN	✓	✓	✓	6	✓	✓	6	✓	✓	6	✓	✓	6						101,102,128
Aspen	'07-09	SUV	✓	✓	✓	11	✓	✓	11	✓	✓	11	✓	✓	11						101,102,121,128
Cirrus 4DR	'95-00	SEDAN	✓	✓	✓	6	✓	✓	6	✓	✓	6	✓	✓	6						101,106,125
Concorde 4DR	'98-04	SEDAN	✓	✓	✓	6	✓	✓	6	✓	✓	6	✓	✓	6						101,102,128
Crossfire 2DR	'04-08	COUPE																			135
LHS 4DR	'98-02	SEDAN	✓	✓	✓	6	✓	✓	6	✓	✓	6	✓	✓	6						101,102,128
Pacifica	'17-19	VAN	✓			10	✓		10	✓		10	✓		10						101,102,121,138
Pacifica	'04-08	SUV	✓			9	✓		9	✓		9	✓		9						101,102,121,138
PT Cruiser	'01-10	WAGON	✓	✓	✓	10	✓	✓	10	✓	✓	10	✓	✓	10						101,102,121,128,129
Sebring 2DR (Hardtop)	'01-06	COUPE	✓			6	✓		6	✓		6	✓		6						101,102,116,128
Sebring 2DR (Hardtop)	'95-00	COUPE																			133,135
Sebring 4DR	'07-10	SEDAN	✓			6	✓		6	✓		6	✓		6						101,102,116,128
Sebring 4DR	'01-06	SEDAN	✓			6	✓		6	✓		6	✓		6						101,102,116,128

FIT TIPS

506-7250_01

NOTE: THULE STRAP RACKS HAVE BEEN DESIGNED TO FIT VEHICLES WITH STANDARD **FACTORY INSTALLED** SPOILERS, UNLESS OTHERWISE SPECIFIED.
PLEASE NOTE, THULE CANNOT BE RESPONSIBLE FOR FITS ON VEHICLES WITH AFTERMARKET SPOILERS.

THULE REAR MOUNTED RACK FIT INFORMATION

1 *What is my vehicle's make, model and year?*

2 *What do I need in order to put a Thule rack on the back of my vehicle?*

CHRYSLER continued

		BODY TYPE	TRUNK													BED				SPARE	FIT TIPS
			9001/9001XT/9001PRO RACEWAY 2	9002/9002XT/9002PRO RACEWAY 3	9003/9003XT/9003PRO RACEWAY PLATFORM	FIT DIAL SETTING	9009 / 9009XT ARCHWAY 2	9010 / 9010XT ARCHWAY 3	FIT DIAL SETTING	9006 / 9006XT GATEWAY 2	9007 / 9007XT GATEWAY 3	FIT DIAL SETTING	910XT PASSAGE 2	911XT PASSAGE 3	FIT DIAL SETTING	501 INSTA-GATER	822XT BEDRIDER	823PRO GATE-MATE (MEDIUM)	824PRO GATE-MATE (LARGE)	963PRO SPARE ME PRO	Read the appropriate numbered tips on the last page before fitting vehicle.
Town & Country	'11-16	VAN	✓	✓	✓	11	✓	✓	11	✓	✓	11	✓	✓	11						101,102,121,128
Town & Country	'08-10	VAN	✓	✓	✓	11	✓	✓	11	✓	✓	11	✓	✓	11						101,102,121,128
Town & Country	'01-07	VAN	✓	✓	✓	10	✓	✓	10	✓	✓	10	✓	✓	10						101,102,121
Town & Country	'96-00	VAN	✓			10	✓		10	✓		10	✓		10						101,102,121,139
Voyager / Grand Voyager	'01-03	VAN	✓	✓	✓	10	✓	✓	10	✓	✓	10	✓	✓	10						101,102,121

DODGE

Avenger 4DR	'07-14	SEDAN	✓	✓	✓	7	✓	✓	7	✓	✓	7	✓	✓	7						101,102,128
Avenger 4DR	'95-00	SEDAN																			133,135
Caliber	'07-12	SUV	✓	✓	✓	9	✓	✓	9	✓	✓	9	✓	✓	9						101,102,121,128
Caliber SRT4	'07-12	SUV																			NO FIT,154
Caliber SXT	'07-12	SUV																			NO FIT,154
Caravan / Grand Caravan	'11-18	VAN	✓	✓	✓	11	✓	✓	11	✓	✓	11	✓	✓	11						101,102,121,128
Caravan / Grand Caravan	'08-10	VAN	✓	✓	✓	11	✓	✓	11	✓	✓	11	✓	✓	11						101,102,121,128
Caravan / Grand Caravan	'01-07	VAN	✓	✓	✓	10	✓	✓	10	✓	✓	10	✓	✓	10						101,102,121,128
Caravan / Grand Caravan	'96-00	VAN	✓			10	✓		10	✓		10	✓		10						101,102,121,139
Challenger 2DR	'15-19	COUPE																			NO FIT
Challenger 2DR	'09-14	COUPE																			NO FIT
Charger 4DR	'15-19	SEDAN	✓	✓	✓	7	✓	✓	7	✓	✓	7	✓	✓	7						101,102,128,129
Charger 4DR	'11-14	SEDAN	✓	✓	✓	7	✓	✓	7	✓	✓	7	✓	✓	7						101,102,128
Charger 4DR	'06-10	SEDAN	✓	✓	✓	7	✓	✓	7	✓	✓	7	✓	✓	7						101,102,128
C/V Tradesman	'11-14	VAN	✓	✓	✓	11	✓	✓	11	✓	✓	11	✓	✓	11						101,102,121,128
Dakota	'09-11	TRUCK														✓	✓	✓			148
Dakota	'05-08	TRUCK														✓	✓	✓			148
Dakota	'97-04	TRUCK														✓	✓	✓			148
Dart 4DR	'13-16	SEDAN	✓	✓	✓	7	✓	✓	7	✓	✓	7	✓	✓	7						101,102,128
Durango	'11-18	SUV	✓	✓	✓	11	✓	✓	11	✓	✓	11	✓	✓	11						101,112,121,125,128
Durango	'04-09	SUV	✓	✓	✓	11	✓	✓	11	✓	✓	11	✓	✓	11						101,112,121,125,128
Durango	'98-03	SUV	✓	✓	✓	10	✓	✓	10	✓	✓	10	✓	✓	10						101,102,121,128
Intrepid 4DR	'98-04	SEDAN	✓	✓	✓	6	✓	✓	6	✓	✓	6	✓	✓	6						101,102,128
Journey	'13-19	SUV	✓	✓	✓	11	✓	✓	11	✓	✓	11	✓	✓	11						101,102,121,128
Journey	'08-12	SUV	✓	✓	✓	11	✓	✓	11	✓	✓	11	✓	✓	11						101,102,121,128
Magnum	'05-08	WAGON	✓	✓	✓	9	✓	✓	9	✓	✓	9	✓	✓	9						101,102,121,128
Neon 4DR	'00-05	SEDAN	✓			7	✓		7	✓		7	✓		7						101,102
Nitro	'07-11	SUV	✓	✓	✓	11	✓	✓	11	✓	✓	11	✓	✓	11						101,102,121,128
ProMaster	'14-19	VAN																			137
Ram 1500	'19	TRUCK														✓	✓		✓		148
Ram 1500	'09-18	TRUCK														✓	✓		✓		148
Ram 1500	'02-08	TRUCK														✓	✓		✓		148
Ram 1500	'94-01	TRUCK														✓	✓		✓		148
Ram 2500 / 3500	'10-19	TRUCK														✓	✓		✓		148
Ram 2500 / 3500	'03-09	TRUCK														✓	✓		✓		148
Ram 2500 / 3500	'02	TRUCK														✓	✓		✓		148
Ram 2500 / 3500	'94-01	TRUCK														✓	✓		✓		148
Stratus 2DR	'01-06	COUPE	✓			6	✓		6	✓		6	✓		6						101,102,116,128
Stratus 4DR	'01-06	SEDAN	✓			6	✓		6	✓		6	✓		6						101,102,116,128
Stratus 4DR	'95-00	SEDAN	✓	✓	✓	6	✓	✓	6	✓	✓	6	✓	✓	6						101,106,125

FIT TIPS

506-7250_01

NOTE: THULE STRAP RACKS HAVE BEEN DESIGNED TO FIT VEHICLES WITH STANDARD **FACTORY INSTALLED** SPOILERS, UNLESS OTHERWISE SPECIFIED.
PLEASE NOTE, THULE CANNOT BE RESPONSIBLE FOR FITS ON VEHICLES WITH AFTERMARKET SPOILERS.

THULE REAR MOUNTED RACK FIT INFORMATION

THULE SWEDEN

1 *What is my vehicle's make, model and year?*

2 *What do I need in order to put a Thule rack on the back of my vehicle?*

FIT TIPS
Read the appropriate numbered tips on the last page before fitting vehicle.

FIAT

		BODY TYPE	TRUNK													BED				SPARE	FIT TIPS
			9001/9001XT/9001PRO RACEWAY 2	9002/9002XT/9002PRO RACEWAY 3	9003/9003XT/9003PRO RACEWAY PLATFORM	FIT DIAL SETTING	9009 / 9009XT ARCHWAY 2	9010 / 9010XT ARCHWAY 3	FIT DIAL SETTING	9006 / 9006XT GATEWAY 2	9007 / 9007XT GATEWAY 3	FIT DIAL SETTING	910XT PASSAGE 2	911XT PASSAGE 3	FIT DIAL SETTING	501 INSTA-GATER	822XT BEDRIDER	823PRO GATE-MATE (MEDIUM)	824PRO GATE-MATE (LARGE)	963PRO SPARE ME PRO	
124 Spider 2DR	'17-19	CONVERTIBLE																			NO FIT,135
500 3DR	'11-19	HATCH	✓	✓	✓	10	✓	✓	10	✓	✓	10	✓	✓	10						101,102,138
500 Abarth 3DR	'12-19	HATCH	✓	✓	✓	10	✓	✓	10	✓	✓	10	✓	✓	10						101,102,138
500C 3DR Convertible	'12-19	CONVERTIBLE																			NO FIT
500E 5DR	'14-19	HATCH	✓	✓	✓	10	✓	✓	10	✓	✓	10	✓	✓	10						101,102,138
500L 5DR	'13-19	HATCH	✓	✓	✓	10	✓	✓	10	✓	✓	10	✓	✓	10						101,102,121,139
500X 5DR	'16-19	HATCH																			NO FIT,157

FORD

C-Max	'13-18	VAN	✓	✓	✓	9	✓	✓	9	✓	✓	9	✓	✓	9						101,102,121,128
Contour 4DR	'95-00	SEDAN	✓			6	✓		6	✓		6	✓		6						101,103,118
Crown Victoria	'92-10	SEDAN	✓			6	✓		6	✓		6	✓		6						101,102
EcoSport	'18-19	SUV	✓			10	✓		10	✓		10	✓		10						101, 102, 113. 121, 128
Edge	'15-19	SUV																			157
Edge	'11-14	SUV	✓	✓	✓	9	✓	✓	9	✓	✓	9	✓	✓	9						101,102,121,138
Edge	'07-10	SUV	✓	✓	✓	9	✓	✓	9	✓	✓	9	✓	✓	9						101,102,121,138
Edge Sport	'15-19	SUV																			157
Edge Sport	'11-14	SUV	✓	✓	✓	9	✓	✓	9	✓	✓	9	✓	✓	9						101,102,121,138
Edge Sport	'07-10	SUV	✓	✓	✓	9	✓	✓	9	✓	✓	9	✓	✓	9						101,102,121,138
Escape	'13-19	SUV																			NO FIT,133
Escape	'08-12	SUV	✓	✓	✓	10	✓	✓	10	✓	✓	10	✓	✓	10						101,102,121,128
Escape	'01-07	SUV	✓	✓	✓	10	✓	✓	10	✓	✓	10	✓	✓	10						101,102,121,128
Escort 4DR	'97-02	SEDAN	✓			7	✓		7	✓		7	✓		7						101,103,116,125,128
Excursion	'00-05	SUV	✓	✓	✓	10	✓	✓	10	✓	✓	10	✓	✓	10						101,102,121
Expedition	'18-19	SUV																			NO FIT, 154
Expedition	'05-17	SUV	✓	✓	✓	11	✓	✓	11	✓	✓	11	✓	✓	11						101,106,121,128
Expedition	'97-04	SUV	✓	✓	✓	11	✓	✓	11	✓	✓	11	✓	✓	11						101,106,121,128
Expedition EL	'18-19	SUV																			NO FIT, 154
Expedition EL	'05-17	SUV	✓	✓	✓	11	✓	✓	11	✓	✓	11	✓	✓	11						101,106,121,128
Expedition EL	'97-04	SUV	✓	✓	✓	11	✓	✓	11	✓	✓	11	✓	✓	11						101,106,121,128
Explorer 2DR	'96-00	SUV	✓	✓	✓	9	✓	✓	9	✓	✓	9	✓	✓	9						101,108,121,139
Explorer 4DR	'16-19	SUV																			157
Explorer 4DR	'11-15	SUV	✓	✓	✓	9	✓	✓	9	✓	✓	9	✓	✓	9						101,102,121,128
Explorer 4DR	'02-10	SUV	✓	✓	✓	10	✓	✓	10	✓	✓	10	✓	✓	10						101,102,121,138
Explorer 4DR	'96-01	SUV	✓	✓	✓	9	✓	✓	9	✓	✓	9	✓	✓	9						101,108,121,138
Explorer Sport	'01-03	SUV	✓			9	✓		9	✓		9	✓		9						101,108,121,139
Explorer Sport Trac	'01-10	TRUCK																✓			153
F-150	'15-19	TRUCK														✓	✓		✓		148
F-150	'09-14	TRUCK														✓	✓		✓		148
F-150	'04-08	TRUCK														✓	✓		✓		148
F-150	'97-03	TRUCK														✓	✓		✓		148
F-150 SVT Raptor	'10-14	TRUCK														✓	✓		✓		148
F-250/350/450/550	'11-19	TRUCK														✓	✓		✓		148
F-250/350/450/550	'99-10	TRUCK														✓	✓		✓		148
Fiesta 4DR	'11-19	SEDAN	✓			7	✓		7	✓		7	✓		7						101,102,128
Fiesta 5DR	'11-19	HATCH	✓			10	✓		10	✓		10	✓		10						101,102,128
Fiesta Sport 5DR	'12-19	HATCH																			NO FIT,154
Five Hundred 4DR	'05-07	SEDAN	✓	✓	✓	8	✓	✓	8	✓	✓	8	✓	✓	8						101,102,116,128

506-7250_01

NOTE: THULE STRAP RACKS HAVE BEEN DESIGNED TO FIT VEHICLES WITH STANDARD **FACTORY INSTALLED** SPOILERS, UNLESS OTHERWISE SPECIFIED.
PLEASE NOTE, THULE CANNOT BE RESPONSIBLE FOR FITS ON VEHICLES WITH AFTERMARKET SPOILERS.

THULE REAR MOUNTED RACK FIT INFORMATION

1 *What is my vehicle's make, model and year?*

2 *What do I need in order to put a Thule rack on the back of my vehicle?*

FORD continued

		BODY TYPE	TRUNK													BED				SPARE	FIT TIPS
			9001/9001XT/9001PRO RACEWAY 2	9002/9002XT/9002PRO RACEWAY 3	9003/9003XT/9003PRO RACEWAY PLATFORM	FIT DIAL SETTING	9009 / 9009XT ARCHWAY 2	9010 / 9010XT ARCHWAY 3	FIT DIAL SETTING	9006 / 9006XT GATEWAY 2	9007 / 9007XT GATEWAY 3	FIT DIAL SETTING	910XT PASSAGE 2	911XT PASSAGE 3	FIT DIAL SETTING	501 INSTA-GATER	822XT BEDRIDER	823PRO GATE-MATE (MEDIUM)	824PRO GATE-MATE (LARGE)	963PRO SPARE ME PRO	Read the appropriate numbered tips on the last page before fitting vehicle.
Flex	'08-19	SUV	✓	✓	✓	10	✓	✓	10	✓	✓	10	✓	✓	10						101,102,121,128
Focus 2DR	'08-11	COUPE	✓	✓	✓	8	✓	✓	8	✓	✓	8	✓	✓	8						101,102,128
Focus 3DR	'00-07	HATCH	✓	✓	✓	8	✓	✓	8	✓	✓	8	✓	✓	8						101,102,121,128
Focus 4DR	'12-18	SEDAN	✓	✓	✓	7	✓	✓	7	✓	✓	7	✓	✓	7						101,102,116,125,126,128
Focus 4DR	'08-11	SEDAN	✓	✓	✓	7	✓	✓	7	✓	✓	7	✓	✓	7						101,102,116,125,126,128
Focus 4DR	'00-07	SEDAN	✓	✓	✓	7	✓	✓	7	✓	✓	7	✓	✓	7						101,103,116,125,126,128
Focus 5DR	'12-18	HATCH	✓	✓	✓	8	✓	✓	8	✓	✓	8	✓	✓	8						101,102,121,128
Focus 5DR	'02-07	HATCH	✓	✓	✓	8	✓	✓	8	✓	✓	8	✓	✓	8						101,102,121,128
Focus RS 5DR	'16-18	HATCH																			NO FIT, 154
Focus Wagon	'00-07	WAGON	✓	✓	✓	10	✓	✓	10	✓	✓	10	✓	✓	10						101,102,121,128
Freestar	'04-07	SUV	✓	✓	✓	11	✓	✓	11	✓	✓	11	✓	✓	11						101,106,121,128
Freestyle	'05-07	SUV																			137
Fusion 4DR	'13-19	SEDAN																			NO FIT
Fusion 4DR	'06-12	SEDAN	✓			8	✓		8	✓		8	✓		8						101,102,116,128
Mustang 2DR	'15-19	SEDAN																			NO FIT,135
Mustang 2DR	'05-14	SEDAN	✓	✓	✓	7	✓	✓	7	✓	✓	7	✓	✓	7						101,102,128
Mustang 2DR	'99-04	SEDAN																			135
Mustang Convertible 2DR	'15-19	SEDAN																			NO FIT,135
Mustang Convertible 2DR	'05-14	SEDAN																			137
Mustang Convertible 2DR	'99-04	SEDAN																			137
Ranger	'19	TRUCK														✓	✓	✓			148
Ranger	'98-11	TRUCK														✓	✓	✓			148
Taurus 4DR	'13-19	SEDAN	✓			8	✓		8	✓		8	✓		8						101,102,116,128
Taurus 4DR	'10-12	SEDAN	✓			8	✓		8	✓		8	✓		8						101,102,116,128
Taurus 4DR	'08-09	SEDAN	✓			8	✓		8	✓		8	✓		8						101,102,116,128
Taurus 4DR	'96-07	SEDAN	✓			6	✓		6	✓		6	✓		6						101,106,126
Taurus Wagon	'96-06	WAGON	✓	✓	✓	9	✓	✓	9	✓	✓	9	✓	✓	9						101,106,121
Taurus X	'08-09	SUV																			137
Thunderbird 2DR	'02-05	COUPE																			135
Transit	'14-19	VAN																			137
Transit Connect	'14-19	VAN																			137
Transit Connect	'09-13	VAN																			137
Windstar	'99-03	VAN	✓	✓	✓	10	✓	✓	10	✓	✓	10	✓	✓	10						101,102,121,128
Vans (E-Series)	'79-13	VAN																			137
ZX2	'98-03	COUPE	✓			7	✓		7	✓		7	✓		7						101,103,116,125,128

GENESIS

G70 4DR	'18-19	SEDAN																			CHECK FOR UPDATE
G80 4DR	'17-19	SEDAN																			NO FIT,133
G90 4DR	'17-19	SEDAN																			NO FIT

GMC

Acadia	'17-19	SUV	✓	✓	✓	10	✓	✓	10	✓	✓	10	✓	✓	10						101,102,121,128
Acadia	'10-16	SUV	✓	✓	✓	9	✓	✓	9	✓	✓	9	✓	✓	9						101,102,121,128
Acadia	'07-09	SUV	✓	✓	✓	9	✓	✓	9	✓	✓	9	✓	✓	9						101,102,121,128
Acadia Denali	'11-16	SUV	✓	✓	✓	9	✓	✓	9	✓	✓	9	✓	✓	9						101,102,121,128
Canyon	'15-19	TRUCK															✓	✓			148
Canyon	'04-12	TRUCK															✓	✓			148

506-7250_01

NOTE: THULE STRAP RACKS HAVE BEEN DESIGNED TO FIT VEHICLES WITH STANDARD **FACTORY INSTALLED** SPOILERS, UNLESS OTHERWISE SPECIFIED.
PLEASE NOTE, THULE CANNOT BE RESPONSIBLE FOR FITS ON VEHICLES WITH AFTERMARKET SPOILERS.

THULE REAR MOUNTED RACK FIT INFORMATION

1 *What is my vehicle's make, model and year?*

2 *What do I need in order to put a Thule rack on the back of my vehicle?*

GMC continued

		BODY TYPE	TRUNK													BED				SPARE	FIT TIPS
			9001/9001XT/9001PRO RACEWAY 2	9002/9002XT/9002PRO RACEWAY 3	9003/9003XT/9003PRO RACEWAY PLATFORM	FIT DIAL SETTING	9009 / 9009XT ARCHWAY 2	9010 / 9010XT ARCHWAY 3	FIT DIAL SETTING	9006 / 9006XT GATEWAY 2	9007 / 9007XT GATEWAY 3	FIT DIAL SETTING	910XT PASSAGE 2	911XT PASSAGE 3	FIT DIAL SETTING	501 INSTA-GATER	822XT BEDRIDER	823PRO GATE-MATE (MEDIUM)	824PRO GATE-MATE (LARGE)	963PRO SPARE ME PRO	Read the appropriate numbered tips on the last page before fitting vehicle.
Denali	'00-06	SUV	✓			10	✓		10	✓		10	✓		10						101,106,121,138
Denali XL	'00-06	SUV	✓			10	✓		10	✓		10	✓		10						101,106,121,138
Envoy	'98-01	SUV																			137
Envoy/Denali 4DR	'02-09	SUV																			135,137
Envoy XL	'02-06	SUV																			135,137
Envoy XUV	'04-05	SUV																			135,137
Jimmy 2DR	'95-01	SUV																		✓	134,135
Jimmy 4DR	'95-01	SUV																		✓	134,135
Safari Van	'90-05	VAN																			137
Sierra 1500	'19	TRUCK														✓	✓		✓		148
Sierra 1500	'14-18	TRUCK														✓	✓		✓		148
Sierra 1500	'07-13	TRUCK														✓	✓		✓		148
Sierra 2500/3500/HD	'15-19	TRUCK														✓	✓		✓		148
Sierra 2500/3500/HD	'07-14	TRUCK														✓	✓		✓		148
Sierra / Classic	'99-07	TRUCK														✓	✓		✓		148
Sonoma	'94-04	TRUCK														✓	✓	✓			148
Terrain	'18-19	SUV																			NO FIT,154
Terrain	'10-17	SUV	✓	✓	✓	9	✓	✓	9	✓	✓	9	✓	✓	9						101,112,121,138
Terrain Denali	'12-17	SUV	✓	✓	✓	9	✓	✓	9	✓	✓	9	✓	✓	9						101,112,121,138
Yukon	'15-19	SUV																			NO FIT,154
Yukon	'07-14	SUV																			134
Yukon	'00-06	SUV	✓			10	✓		10	✓		10	✓		10						101,106,121,138
Yukon Denali	'15-19	SUV																			NO FIT,154
Yukon Denali	'07-14	SUV																			134
Yukon XL	'15-19	SUV																			NO FIT,154
Yukon XL	'07-14	SUV																			134
Yukon XL	'00-06	SUV	✓			10	✓		10	✓		10	✓		10						101,106,121,138

HONDA

Accord 2DR	'13-17	COUPE	✓	✓	✓	6	✓	✓	6	✓	✓	6	✓	✓	6						101,102,132
Accord 2DR	'08-12	COUPE	✓	✓	✓	7	✓	✓	7	✓	✓	7	✓	✓	7						101,102,128
Accord 2DR	'03-07	COUPE	✓	✓	✓	7	✓	✓	7	✓	✓	7	✓	✓	7						101,102,147
Accord 2DR	'98-02	COUPE	✓			6	✓		6	✓		6	✓		6						101,110,128
Accord 4DR	'18-19	SEDAN	✓			7	✓		7	✓		7	✓		7						101,102,119
Accord 4DR	'13-17	SEDAN	✓	✓	✓	6	✓	✓	6	✓	✓	6	✓	✓	6						101,102,138
Accord 4DR	'08-12	SEDAN	✓	✓	✓	8	✓	✓	8	✓	✓	8	✓	✓	8						101,102,128
Accord 4DR	'03-07	SEDAN	✓	✓	✓	8	✓	✓	8	✓	✓	8	✓	✓	8						101,102,128
Accord 4DR	'98-02	SEDAN	✓	✓	✓	7	✓	✓	7	✓	✓	7	✓	✓	7						101,102,128
Civic 2DR	'16-19	COUPE	✓			8	✓		8	✓		8	✓		8						101,102,121,128
Civic 2DR	'12-15	COUPE	✓	✓	✓	7	✓	✓	7	✓	✓	7	✓	✓	7						101,102,138
Civic 2DR	'06-11	COUPE	✓	✓	✓	7	✓	✓	7	✓	✓	7	✓	✓	7						101,102,138
Civic 2DR	'01-05	COUPE	✓	✓	✓	6	✓	✓	6	✓	✓	6	✓	✓	6						101,102,128
Civic 2DR	'96-00	COUPE	✓			6	✓		6	✓		6	✓		6						101,102
Civic Si 3DR	'02-05	HATCH	✓	✓	✓	8	✓	✓	8	✓	✓	8	✓	✓	8						101,102,121,128
Civic 3DR	'96-00	HATCH																			135
Civic 4DR	'16-19	SEDAN	✓			7	✓		7	✓		7	✓		7						101,102,116,128
Civic 4DR	'13-15	SEDAN	✓	✓	✓	6	✓	✓	6	✓	✓	6	✓	✓	6						101,102,138
Civic 4DR	'06-12	SEDAN	✓	✓	✓	7	✓	✓	7	✓	✓	7	✓	✓	7						101,102,128

506-7250_01

NOTE: THULE STRAP RACKS HAVE BEEN DESIGNED TO FIT VEHICLES WITH STANDARD **FACTORY INSTALLED** SPOILERS, UNLESS OTHERWISE SPECIFIED.
PLEASE NOTE, THULE CANNOT BE RESPONSIBLE FOR FITS ON VEHICLES WITH AFTERMARKET SPOILERS.

THULE REAR MOUNTED RACK FIT INFORMATION

1 *What is my vehicle's make, model and year?*

2 *What do I need in order to put a Thule rack on the back of my vehicle?*

HONDA continued

		BODY TYPE	TRUNK													BED				SPARE	FIT TIPS
			9001/9001XT/9001PRO RACEWAY 2	9002/9002XT/9002PRO RACEWAY 3	9003/9003XT/9003PRO RACEWAY PLATFORM	FIT DIAL SETTING	9009 / 9009XT ARCHWAY 2	9010 / 9010XT ARCHWAY 3	FIT DIAL SETTING	9006 / 9006XT GATEWAY 2	9007 / 9007XT GATEWAY 3	FIT DIAL SETTING	910XT PASSAGE 2	911XT PASSAGE 3	FIT DIAL SETTING	501 INSTA-GATER	822XT BEDRIDER	823PRO GATE-MATE (MEDIUM)	824PRO GATE-MATE (LARGE)	963PRO SPARE ME PRO	Read the appropriate numbered tips on the last page before fitting vehicle.
Civic 4DR	'01-05	SEDAN	✓	✓	✓	6	✓	✓	6	✓	✓	6	✓	✓	6						101,102,128
Civic 4DR	'96-00	SEDAN	✓			6	✓		6	✓		6	✓		6						101,102
Civic Hatchback	'17-19	HATCH																			NO FIT,135
Clarity	'18-19	SEDAN	✓			8															101,102,128
Crosstour	'10-15	SPORTBACK	✓	✓	✓	8	✓	✓	8	✓	✓	8	✓	✓	8						NO FIT,134
CR-V	'17-19	SUV																			NO FIT,154
CR-V	'12-16	SUV																			133
CR-V	'07-11	SUV																			133
CR-V	'02-06	SUV																		✓	
CR-V	'97-01	SUV																		✓	
CR-Z 3DR	'11-16	HATCH	✓			7	✓		7	✓		7	✓		7						101,102,121,128
Element	'03-11	SUV	✓	✓	✓	11	✓	✓	11	✓	✓	11	✓	✓	11						101,121,128,147
Element SC	'07-11	SUV	✓	✓	✓	11	✓	✓	11	✓	✓	11	✓	✓	11						101,121,128,147
FCX Clarity 4DR	'09-14	SEDAN																			NO FIT,135
Fit 5DR	'15-19	HATCH	✓	✓	✓	11	✓	✓	11	✓	✓	11	✓	✓	11						101,102,121,128,151
Fit 5DR	'09-14	HATCH	✓	✓	✓	10	✓	✓	10	✓	✓	10	✓	✓	10						101,102,121,128,151
Fit 5DR	'07-08	HATCH	✓	✓	✓	10	✓	✓	10	✓	✓	10	✓	✓	10						101,102,121,128,151
Fit Sport 5DR	'09-14	HATCH																			NO FIT,154
Fit Sport 5DR	'07-08	HATCH																			NO FIT,154
HRV	'16-19	SUV	✓			10	✓		10	✓		10	✓		10						101,102,116,121,128
Insight	'18-19	HATCH																			NO FIT, 135
Insight	'10-14	HATCH	✓	✓	✓	8	✓	✓	8	✓	✓	8	✓	✓	8						101,102,121,138
Insight	'00-06	HATCH																			134,135
Odyssey	'18-19	VAN																			NO FIT,154
Odyssey	'11-17	VAN																			NO FIT,154
Odyssey	'05-10	VAN																			146
Odyssey	'95-04	VAN																			135
Passport	'98-02	SUV	✓			8	✓		8	✓		8	✓		8					✓	101,102,121,138,144
Pilot	'16-19	SUV	✓			10															101,102,116,121,128
Pilot	'09-15	SUV																			133
Pilot	'03-08	SUV																			133
Prelude 2DR	'97-01	COUPE																			135
Ridgeline	'17-19	TRUCK															✓				153
Ridgeline	'06-14	TRUCK																✓			153
Ridgeline Sport	'12-14	TRUCK																✓			153
S2000 2DR	'00-09	COUPE																			135

HUMMER

H1 / Hummer	'93-08	SUV																			NO FIT
H2 / H2 SUT	'03-10	SUV																			NO FIT
H3	'05-10	SUV																		✓	
H3T	'09-10	TRUCK															✓	✓			153

HYUNDAI

Accent 3DR	'07-11	HATCH	✓	✓	✓	8	✓	✓	8	✓	✓	8	✓	✓	8						101,102,128
Accent 3DR	'00-06	HATCH	✓	✓	✓	8	✓	✓	8	✓	✓	8	✓	✓	8						101,102,128
Accent 4DR	'18-19	SEDAN																			NO FIT, 154
Accent 4DR	'12-17	SEDAN	✓	✓	✓	7	✓	✓	7	✓	✓	7	✓	✓	7						101,102,128
Accent 4DR	'06-11	SEDAN	✓	✓	✓	7	✓	✓	7	✓	✓	7	✓	✓	7						101,102,128

506-7250_01

NOTE: THULE STRAP RACKS HAVE BEEN DESIGNED TO FIT VEHICLES WITH STANDARD **FACTORY INSTALLED** SPOILERS, UNLESS OTHERWISE SPECIFIED.
PLEASE NOTE, THULE CANNOT BE RESPONSIBLE FOR FITS ON VEHICLES WITH AFTERMARKET SPOILERS.

THULE REAR MOUNTED RACK FIT INFORMATION

1 *What is my vehicle's make, model and year?*

2 *What do I need in order to put a Thule rack on the back of my vehicle?*

HYUNDAI continued

		BODY TYPE	TRUNK													BED				SPARE	FIT TIPS
			9001/9001XT/9001PRO RACEWAY 2	9002/9002XT/9002PRO RACEWAY 3	9003/9003XT/9003PRO RACEWAY PLATFORM	FIT DIAL SETTING	9009 / 9009XT ARCHWAY 2	9010 / 9010XT ARCHWAY 3	FIT DIAL SETTING	9006 / 9006XT GATEWAY 2	9007 / 9007XT GATEWAY 3	FIT DIAL SETTING	910XT PASSAGE 2	911XT PASSAGE 3	FIT DIAL SETTING	501 INSTA-GATER	822XT BEDRIDER	823PRO GATE-MATE (MEDIUM)	824PRO GATE-MATE (LARGE)	963PRO SPARE ME PRO	Read the appropriate numbered tips on the last page before fitting vehicle.
Accent 4DR	'00-05	SEDAN	✓	✓	✓	7	✓	✓	7	✓	✓	7	✓	✓	7						101,102,128
Accent 5DR	'18-19	HATCH																			CHECK FOR UPDATE
Accent 5DR	'12-17	HATCH	✓	✓	✓	8	✓	✓	8	✓	✓	8	✓	✓	8						101,102,121,128
Azera 4DR	'12-17	SEDAN	✓	✓	✓	7	✓	✓	7	✓	✓	7	✓	✓	7						101,102,128
Azera 4DR	'06-11	SEDAN	✓	✓	✓	7	✓	✓	7	✓	✓	7	✓	✓	7						101,102,128
Elantra 2DR	'14-17	COUPE	✓	✓	✓	7	✓	✓	7	✓	✓	7	✓	✓	7						101,102,128
Elantra 4DR	'17-19	SEDAN	✓	✓	✓	7	✓	✓	7	✓	✓	7	✓	✓	7						101,102,128
Elantra 4DR	'11-16	SEDAN	✓	✓	✓	7	✓	✓	7	✓	✓	7	✓	✓	7						101,102,128
Elantra 4DR	'07-10	SEDAN	✓	✓	✓	8	✓	✓	8	✓	✓	8	✓	✓	8						101,102,128
Elantra 4DR	'01-06	SEDAN	✓	✓	✓	7	✓	✓	7	✓	✓	7	✓	✓	7						101,102,128
Elantra 4DR	'99-00	SEDAN	✓	✓	✓	7	✓	✓	7	✓	✓	7	✓	✓	7						101,102,126,128
Elantra 5DR	'01-06	HATCH	✓	✓	✓	7	✓	✓	7	✓	✓	7	✓	✓	7						101,102,121,128
Elantra GT 5DR	'18-19	HATCH	✓			8	✓		8	✓		8	✓		8						101,102,121,128
Elantra GT 5DR	'13-17	HATCH	✓	✓	✓	8	✓	✓	8	✓	✓	8	✓	✓	8						101,102,121,128
Elantra Touring	'09-12	WAGON	✓	✓	✓	7	✓	✓	7	✓	✓	7	✓	✓	7						101,102,121,138
Elantra Touring	'01-05	WAGON																			134,137
Elantra Touring	'97-00	WAGON																			134
Entourage	'07-10	SUV	✓	✓	✓	10	✓	✓	10	✓	✓	10	✓	✓	10						101,102,121,128
Equus 4DR	'11-16	SEDAN																			NO FIT
Genesis 2DR	'09-16	COUPE																			146
Genesis 4DR	'15-16	SEDAN																			NO FIT,133
Genesis 4DR	'09-14	SEDAN	✓	✓	✓	8	✓	✓	8	✓	✓	8	✓	✓	8						101,102,128
Ioniq	'17-19	SEDAN																			NO FIT,134
Kona	'18-19	SUV																			NO FIT
Nexo	'19	SUV																			CHECK FOR UPDATE
Santa Fe	'19	SUV																			NO FIT, 135
Santa Fe	'13-18	SUV	✓	✓	✓	10	✓	✓	10	✓	✓	10	✓	✓	10						101,102,121,128
Santa Fe	'07-12	SUV	✓	✓	✓	10	✓	✓	10	✓	✓	10	✓	✓	10						101,102,121,128
Santa Fe	'01-06	SUV	✓	✓	✓	9	✓	✓	9	✓	✓	9	✓	✓	9						101,102,121,138
Santa Fe XL	'19	SUV	✓	✓	✓	10	✓	✓	10	✓	✓	10	✓	✓	10						101,102,121,128
Santa Fe Sport	'13-18	SUV	✓	✓	✓	10	✓	✓	10	✓	✓	10	✓	✓	10						101,102,121,128
Sonata 4DR	'18-19	SEDAN																			NO FIT,135
Sonata 4DR	'15-17	SEDAN																			NO FIT,133
Sonata 4DR	'11-14	SEDAN	✓	✓	✓	7	✓	✓	7	✓	✓	7	✓	✓	7						101,102,128
Sonata 4DR	'06-10	SEDAN	✓	✓	✓	7	✓	✓	7	✓	✓	7	✓	✓	7						101,102,128
Sonata 4DR	'02-05	SEDAN	✓	✓	✓	7	✓	✓	7	✓	✓	7	✓	✓	7						101,102,128
Sonata 4DR	'99-01	SEDAN	✓			7	✓		7	✓		7	✓		7						101,102,126,128
Tiburon 2DR	'02-08	COUPE	✓	✓	✓	7	✓	✓	7	✓	✓	7	✓	✓	7						101,102,121,128
Tiburon 2DR	'97-01	COUPE																			133
Tuscon	'16-19	SUV																			NO FIT,133
Tuscon	'10-15	SUV	✓	✓	✓	10	✓	✓	10	✓	✓	10	✓	✓	10						101,102,119,121
Tuscon	'05-09	SUV	✓	✓	✓	10	✓	✓	10	✓	✓	10	✓	✓	10						101,102,121,128
Veloster 3DR	'19	HATCH																			137
Veloster 3DR	'12-18	HATCH																			137
Veracruz	'07-12	VAN																			134
XG300 / 350 4DR	'01-05	SEDAN	✓	✓	✓	7	✓	✓	7	✓	✓	7	✓	✓	7						101,102,128

506-7250_01

NOTE: THULE STRAP RACKS HAVE BEEN DESIGNED TO FIT VEHICLES WITH STANDARD **FACTORY INSTALLED** SPOILERS, UNLESS OTHERWISE SPECIFIED.
PLEASE NOTE, THULE CANNOT BE RESPONSIBLE FOR FITS ON VEHICLES WITH AFTERMARKET SPOILERS.

THULE REAR MOUNTED RACK FIT INFORMATION

1 *What is my vehicle's make, model and year?*

2 *What do I need in order to put a Thule rack on the back of my vehicle?*

INFINITI

		BODY TYPE	TRUNK													BED				SPARE	FIT TIPS
			9001/9001XT/9001PRO RACEWAY 2	9002/9002XT/9002PRO RACEWAY 3	9003/9003XT/9003PRO RACEWAY PLATFORM	FIT DIAL SETTING	9009 / 9009XT ARCHWAY 2	9010 / 9010XT ARCHWAY 3	FIT DIAL SETTING	9006 / 9006XT GATEWAY 2	9007 / 9007XT GATEWAY 3	FIT DIAL SETTING	910XT PASSAGE 2	911XT PASSAGE 3	FIT DIAL SETTING	501 INSTA-GATER	822XT BEDRIDER	823PRO GATE-MATE (MEDIUM)	824PRO GATE-MATE (LARGE)	963PRO SPARE ME PRO	Read the appropriate numbered tips on the last page before fitting vehicle.
EX35	'08-13	SUV	✓	✓	✓	10	✓	✓	10	✓	✓	10	✓	✓	10						101,102,121,128,151
EX37	'13	SUV	✓	✓	✓	10	✓	✓	10	✓	✓	10	✓	✓	10						101,102,121,128,151
FX35	'07-13	SUV	✓	✓	✓	10	✓	✓	10	✓	✓	10	✓	✓	10						101,102,121,141
FX37	'13	SUV	✓	✓	✓	10	✓	✓	10	✓	✓	10	✓	✓	10						101,102,121,141
FX45	'03-08	SUV	✓	✓	✓	10	✓	✓	10	✓	✓	10	✓	✓	10						101,102,121,141
FX50	'09-13	SUV																			NO FIT, 154
G20 4DR	'99-02	SEDAN	✓	✓	✓	7	✓	✓	7	✓	✓	7	✓	✓	7						101,102,116,128
G25 4DR	'11-12	SEDAN	✓			7	✓		7	✓		7	✓		7						101,102,116,128
G35 2DR	'03-08	COUPE					✓		7	✓		7	✓		7						101,102,138
G35 4DR	'07-08	SEDAN	✓			7	✓		7	✓		7	✓		7						101,102,116,128
G35 4DR	'03-06	SEDAN	✓			7	✓		7	✓		7	✓		7						101,102,116,128
G37 2DR	'09-12	COUPE					✓		7	✓		7	✓		7						101,102,138
G37 4DR	'09-13	SEDAN	✓			7	✓		7	✓		7	✓		7						101,102,116,128
G37 Convertible	'09-12	CONVERTIBLE																			NO FIT
I30 4DR	'00-01	SEDAN	✓	✓	✓	6	✓	✓	6	✓	✓	6	✓	✓	6						101,103,125,128
I35 4DR	'02-04	SEDAN	✓	✓	✓	6	✓	✓	6	✓	✓	6	✓	✓	6						101,103,125,128
JX	'12-13	SUV	✓	✓	✓	11	✓	✓	11	✓	✓	11	✓	✓	11						101,102,121,128
M 4DR	'11-13	SEDAN	✓	✓	✓	8	✓	✓	8	✓	✓	8	✓	✓	8						101,102,128
M35 4DR	'06-10	SEDAN	✓	✓	✓	8	✓	✓	8	✓	✓	8	✓	✓	8						101,102,128
M45 4DR	'06-10	SEDAN	✓	✓	✓	8	✓	✓	8	✓	✓	8	✓	✓	8						101,103,128
M45 4DR	'03-04	SEDAN																			135
Q30	'16-19	HATCH																			NO FIT,137
Q45	'02-07	SUV																			133
Q45	'97-01	SUV																			133
Q50 4DR	'14-19	SEDAN	✓			7	✓		7	✓		7	✓		7						101,102,116,128
Q60 2DR	'17-19	COUPE																			NO FIT,133
Q60 2DR	'14-16	COUPE					✓		7	✓		7	✓		7						101,102,138
Q70 4DR	'14-19	SEDAN	✓	✓	✓	8	✓	✓	8	✓	✓	8	✓	✓	8						101,102,128
QX4 w/o Spare	'97-03	SUV	✓	✓	✓	10	✓	✓	10	✓	✓	10	✓	✓	10						101,102,121,128
QX30	'16-19	HATCH																			NO FIT,137
QX50	'19	SUV																			NO FIT, 137
QX50	'16-18	SUV																			NO FIT, 154
QX50	'14-15	SUV																			NO FIT, 154
QX56	'11-13	SUV	✓	✓	✓	11	✓	✓	11	✓	✓	11	✓	✓	11						101,112,121,128
QX56	'04-10	SUV	✓	✓	✓	11	✓	✓	11	✓	✓	11	✓	✓	11						101,112,121,128
QX60	'14-19	SUV																			NO FIT, 134
QX70	'14-17	SUV	✓	✓	✓	10	✓	✓	10	✓	✓	10	✓	✓	10						101,102,121,141
QX80	'18-19	SUV																			NO FIT, 134
QX80	'14-17	SUV	✓	✓	✓	11	✓	✓	11	✓	✓	11	✓	✓	11						101,112,121,128

ISUZU

Amigo	'99-01	SUV																		✓	
Ascender	'03-10	SUV																			135,137
Axiom	'02-04	SUV	✓	✓	✓	10	✓	✓	10	✓	✓	10	✓	✓	10						101,102,121,128
Hombre	'96-01	TRUCK																✓			135
I-280/I-290	'06-09	TRUCK															✓	✓			153
I-350/I-370	'06-09	TRUCK															✓	✓			153
Rodeo	'98-04	SUV																		✓	

506-7250_01

NOTE: THULE STRAP RACKS HAVE BEEN DESIGNED TO FIT VEHICLES WITH STANDARD **FACTORY INSTALLED** SPOILERS, UNLESS OTHERWISE SPECIFIED.
PLEASE NOTE, THULE CANNOT BE RESPONSIBLE FOR FITS ON VEHICLES WITH AFTERMARKET SPOILERS.

THULE REAR MOUNTED RACK FIT INFORMATION

1 *What is my vehicle's make, model and year?*

2 *What do I need in order to put a Thule rack on the back of my vehicle?*

FIT TIPS Read the appropriate numbered tips on the last page before fitting vehicle.

ISUZU continued		BODY TYPE	TRUNK													BED				SPARE	
			9001/9001XT/9001PRO RACEWAY 2	9002/9002XT/9002PRO RACEWAY 3	9003/9003XT/9003PRO RACEWAY PLATFORM	FIT DIAL SETTING	9009 / 9009XT ARCHWAY 2	9010 / 9010XT ARCHWAY 3	FIT DIAL SETTING	9006 / 9006XT GATEWAY 2	9007 / 9007XT GATEWAY 3	FIT DIAL SETTING	910XT PASSAGE 2	911XT PASSAGE 3	FIT DIAL SETTING	501 INSTA-GATER	822XT BEDRIDER	823PRO GATE-MATE (MEDIUM)	824PRO GATE-MATE (LARGE)	963PRO SPARE ME PRO	
Trooper	'92-02	SUV																		✓	144

JAGUAR

E-Pace	'18-19	SUV																			CHECK FOR UPDATE
F-Pace	'16-19	SUV																			NO FIT,154
F-Type Convertible	'13-19	CONVERTIBLE																			135
I-Pace	'19	WAGON																			CHECK FOR UPDATE
S-Type 4DR	'00-08	SEDAN	✓	✓	✓	7	✓	✓	7	✓	✓	7	✓	✓	7						101,102,128
VDP Vanden Plas 4DR	'96-02	SEDAN	✓	✓	✓	6	✓	✓	6	✓	✓	6	✓	✓	6						101,128,130
XE 4DR	'17-19	SEDAN																			CHECK FOR UPDATE
XF 4DR	'16-19	SEDAN																			CHECK FOR UPDATE
XF 4DR	'09-15	SEDAN																			135
XF Sportbrake 5DR	'18-19	WAGON																			CHECK FOR UPDATE
XFR 4DR	'10-15	SEDAN																			135
XJ 4DR	'10-19	SEDAN																			135
XJR 4DR	'10-18	SEDAN																			135
XJ8 4DR	'97-09	SEDAN	✓	✓	✓	6	✓	✓	6	✓	✓	6	✓	✓	6						101,128,130
XK 2DR	'12-15	COUPE																			135
XK 2DR	'09-11	COUPE																			135
XKR 2DR	'12-15	COUPE																			135
XKR 2DR	'10-11	COUPE																			135
XK8 2DR	'97-11	COUPE																			135
X-Type 4DR	'02-08	SEDAN	✓	✓	✓	7	✓	✓	7	✓	✓	7	✓	✓	7						101,102,128
X-Type Wagon	'05-08	WAGON	✓	✓	✓	7	✓	✓	7	✓	✓	7	✓	✓	7						101,102,128

JEEP

Cherokee	'14-19	SUV																			NO FIT,133,154
Cherokee	'91-01	SUV	✓	✓	✓	8	✓	✓	8	✓	✓	8	✓	✓	8						101,109,121,139
Commander	'06-10	SUV	✓	✓	✓	11	✓	✓	11	✓	✓	11	✓	✓	11						101,102,121,128
All-New Compass	'17-19	SUV																			NO FIT,154
Compass	'11-17	SUV	✓	✓	✓	9	✓	✓	9	✓	✓	9	✓	✓	9						101,102,121,128
Compass	'07-10	SUV	✓	✓	✓	9	✓	✓	9	✓	✓	9	✓	✓	9						101,102,121,128
Grand Cherokee	'14-19	SUV																			NO FIT, 154
Grand Cherokee	'11-13	SUV	✓	✓		9	✓	✓	9	✓	✓	9	✓	✓	9						101,102,121,128,151
Grand Cherokee	'05-10	SUV	✓	✓		9	✓	✓	9	✓	✓	9	✓	✓	9						101,105,121,128
Grand Cherokee	'99-04	SUV	✓			10	✓		10	✓		10	✓		10						101,102,121,138
Liberty	'08-12	SUV	✓	✓	✓	11	✓	✓	11	✓	✓	11	✓	✓	11						101,102,121,128
Liberty	'02-07	SUV																		✓	
Liberty Renegade	'05-07	SUV																		✓	
Patriot	'07-17	SUV	✓	✓	✓	11	✓	✓	11	✓	✓	11	✓	✓	11						101,102,121,128
Renegade	'15-19	SUV																			NO FIT,157
Wrangler	'18-19	JEEP																			CHECK FOR UPDATE
Wrangler	'87-17	JEEP																		✓	
Wrangler Unlimited	'18-19	JEEP																			CHECK FOR UPDATE
Wrangler Unlimited	'04-17	JEEP																		✓	

KIA

Amanti 4DR	'04-09	SEDAN	✓	✓	✓	7	✓	✓	7	✓	✓	7	✓	✓	7						101,102,128
Borrego	'09-12	SUV																			NO FIT

506-7250_01

NOTE: THULE STRAP RACKS HAVE BEEN DESIGNED TO FIT VEHICLES WITH STANDARD **FACTORY INSTALLED** SPOILERS, UNLESS OTHERWISE SPECIFIED.
PLEASE NOTE, THULE CANNOT BE RESPONSIBLE FOR FITS ON VEHICLES WITH AFTERMARKET SPOILERS.

THULE REAR MOUNTED RACK FIT INFORMATION

1 *What is my vehicle's make, model and year?*

2 *What do I need in order to put a Thule rack on the back of my vehicle?*

KIA continued		BODY TYPE	TRUNK													BED				SPARE	FIT TIPS
			9001/9001XT/9001PRO RACEWAY 2	9002/9002XT/9002PRO RACEWAY 3	9003/9003XT/9003PRO RACEWAY PLATFORM	FIT DIAL SETTING	9009 / 9009XT ARCHWAY 2	9010 / 9010XT ARCHWAY 3	FIT DIAL SETTING	9006 / 9006XT GATEWAY 2	9007 / 9007XT GATEWAY 3	FIT DIAL SETTING	910XT PASSAGE 2	911XT PASSAGE 3	FIT DIAL SETTING	501 INSTA-GATER	822XT BEDRIDER	823PRO GATE-MATE (MEDIUM)	824PRO GATE-MATE (LARGE)	963PRO SPARE ME PRO	Read the appropriate numbered tips on the last page before fitting vehicle.
Cadenza 4DR	'17-19	SEDAN																			NO FIT
Cadenza 4DR	'12-16	SEDAN																			NO FIT,133
Carens	'07-12	SUV	✓	✓	✓	11	✓	✓	11	✓	✓	11	✓	✓	11						101,102,121,128
Forte Koup 2DR	'14-17	COUPE	✓	✓	✓	7	✓	✓	7	✓	✓	7	✓	✓	7						101,102,128
Forte Koup 2DR	'10-13	COUPE	✓	✓	✓	7	✓	✓	7	✓	✓	7	✓	✓	7						101,102,128
Forte 4DR	'19	SEDAN																			NO FIT, 135
Forte 4DR	'14-18	SEDAN	✓	✓	✓	8	✓	✓	8	✓	✓	8	✓	✓	8						101,102,128
Forte 4DR	'10-13	SEDAN	✓	✓	✓	8	✓	✓	8	✓	✓	8	✓	✓	8						101,102,128
Forte 5DR	'14-19	HATCH	✓	✓	✓	10	✓	✓	10	✓	✓	10	✓	✓	10						101,102,121,138
Forte 5DR	'11-13	HATCH	✓	✓	✓	10	✓	✓	10	✓	✓	10	✓	✓	10						101,102,121,138
K900 4DR	'19	SEDAN																			NO FIT
K900 4DR	'13-18	SEDAN	✓	✓	✓	7	✓	✓	7	✓	✓	7	✓	✓	7						101,102,128
Niro	'17-19	SUV	✓			11															101,102,121,128
Optima 4DR	'16-19	SEDAN	✓	✓	✓	7	✓	✓	7	✓	✓	7	✓	✓	7						101,102,128
Optima 4DR	'11-15	SEDAN	✓	✓	✓	7	✓	✓	7	✓	✓	7	✓	✓	7						101,102,128
Optima 4DR	'07-10	SEDAN	✓	✓	✓	7	✓	✓	7	✓	✓	7	✓	✓	7						101,102,128
Optima 4DR	'01-06	SEDAN	✓	✓	✓	7	✓	✓	7	✓	✓	7	✓	✓	7						101,102,128
Rio 4DR	'18-19	SEDAN																			NO FIT
Rio 4DR	'12-17	SEDAN	✓	✓	✓	8	✓	✓	8	✓	✓	8	✓	✓	8						101,102,128
Rio 4DR	'06-11	SEDAN	✓	✓	✓	8	✓	✓	8	✓	✓	8	✓	✓	8						101,102,128
Rio 4DR	'01-05	SEDAN	✓	✓	✓	7	✓	✓	7	✓	✓	7	✓	✓	7						101,102,128
Rio5 5DR	'18-19	HATCH	✓			9	✓		9	✓		9	✓		9						101, 102, 113, 121, 128
Rio5 5DR	'12-17	HATCH	✓	✓	✓	8	✓	✓	8	✓	✓	8	✓	✓	8						101,102,121,128
Rio Cinco Wagon	'06-11	WAGON	✓	✓	✓	9	✓	✓	9	✓	✓	9	✓	✓	9						101,102,121,128
Rio Cinco Wagon	'02-05	WAGON	✓	✓	✓	9	✓	✓	9	✓	✓	9	✓	✓	9						101,102,121,128
Rondo (Canada)	'14-19	SUV	✓	✓	✓	9	✓	✓	9	✓	✓	9	✓	✓	9						101,102,121,128
Rondo	'07-13	SUV	✓	✓	✓	11	✓	✓	11	✓	✓	11	✓	✓	11						101,102,121,128
Sedona	'15-19	VAN																			NO FIT,154
Sedona	'11-14	VAN	✓	✓	✓	11	✓	✓	11	✓	✓	11	✓	✓	11						101,102,121
Sedona	'06-10	VAN	✓	✓	✓	11	✓	✓	11	✓	✓	11	✓	✓	11						101,102,121
Sedona	'02-05	VAN	✓	✓	✓	10	✓	✓	10	✓	✓	10	✓	✓	10						101,102,121,138
Sephia 4DR	'98-01	SEDAN	✓			7	✓		7	✓		7	✓		7						101,102,128
Soul	'14-19	SUV	✓			11	✓		11	✓		11	✓		11						101,102,121,128,151
Soul	'10-13	SUV	✓	✓	✓	11	✓	✓	11	✓	✓	11	✓	✓	11						101,102,121,128,151
Sorento	'16-19	SUV																			NO FIT,135
Sorento	'14-15	SUV	✓	✓	✓	10	✓	✓	10	✓	✓	10	✓	✓	10						101,102,121,125,128
Sorento	'11-13	SUV	✓	✓	✓	10	✓	✓	10	✓	✓	10	✓	✓	10						101,102,121,125,128
Sorento	'03-09	SUV	✓	✓	✓	10	✓	✓	10	✓	✓	10	✓	✓	10						101,103,121,125,128
Spectra 4DR	'07-09	SEDAN	✓	✓	✓	8	✓	✓	8	✓	✓	8	✓	✓	8						101,102,128
Spectra 4DR	'04.5-06	SEDAN																			137
Spectra 4DR	'00-04.5	SEDAN	✓			6	✓		6	✓		6	✓		6						101,102,128
Spectra5 Wagon	'05-09	WAGON																			134
Sportage	'17-19	SUV																			NO FIT,133
Sportage	'11-16	SUV	✓	✓	✓	10	✓	✓	10	✓	✓	10	✓	✓	10						101,102,119,121
Sportage	'05-10	SUV	✓	✓	✓	10	✓	✓	10	✓	✓	10	✓	✓	10						101,102,121,128
Sportage	'95-02	SUV																		✓	
Stinger 4DR	'18-19	SEDAN																			NO FIT

506-7250_01

NOTE: THULE STRAP RACKS HAVE BEEN DESIGNED TO FIT VEHICLES WITH STANDARD **FACTORY INSTALLED** SPOILERS, UNLESS OTHERWISE SPECIFIED.
PLEASE NOTE, THULE CANNOT BE RESPONSIBLE FOR FITS ON VEHICLES WITH AFTERMARKET SPOILERS.

THULE REAR MOUNTED RACK FIT INFORMATION

1 *What is my vehicle's make, model and year?*

2 *What do I need in order to put a Thule rack on the back of my vehicle?*

FIT TIPS
Read the appropriate numbered tips on the last page before fitting vehicle.

LAND ROVER

		BODY TYPE	TRUNK													BED				SPARE	
			9001/9001XT/9001PRO RACEWAY 2	9002/9002XT/9002PRO RACEWAY 3	9003/9003XT/9003PRO RACEWAY PLATFORM	FIT DIAL SETTING	9009 / 9009XT ARCHWAY 2	9010 / 9010XT ARCHWAY 3	FIT DIAL SETTING	9006 / 9006XT GATEWAY 2	9007 / 9007XT GATEWAY 3	FIT DIAL SETTING	910XT PASSAGE 2	911XT PASSAGE 3	FIT DIAL SETTING	501 INSTA-GATER	822XT BEDRIDER	823PRO GATE-MATE (MEDIUM)	824PRO GATE-MATE (LARGE)	963PRO SPARE ME PRO	
Discovery	'17-19	SUV																			NO FIT,154
Discovery II	'98-04	SUV																		✓	
Discovery Sport	'15-19	SUV																			NO FIT,154
Evoque Coupe 3DR	'12-19	SUV																			NO FIT,154
Evoque 5DR	'12-19	SUV																			NO FIT,154
Freelander	'02-05	SUV																		✓	
LR2	'07-14	SUV	✓	✓	✓	10	✓	✓	10	✓	✓	10	✓	✓	10						101,102,121,128
LR3	'05-09	SUV	✓	✓	✓	11	✓	✓	11	✓	✓	11	✓	✓	11						101,128,147
LR4	'10-16	SUV	✓	✓	✓	11	✓	✓	11	✓	✓	11	✓	✓	11						101,128,147
Range Rover	'13-19	SUV																			137
Range Rover	'03-12	SUV																			137
Range Rover Sport	'14-19	SUV																			137
Range Rover Sport	'03-13	SUV																			137
Velar	'19	SUV																			CHECK FOR UPDATE

LEXUS

CT200H 5DR	'11-17	HATCH	✓	✓	✓	8	✓	✓	8	✓	✓	8	✓	✓	8						101,102,121,128
CT200H F Sport 5DR	'11-17	HATCH	✓	✓	✓	8	✓	✓	8	✓	✓	8	✓	✓	8						101,102,121,128
ES	'19	SEDAN																			CHECK FOR UPDATE
ES300 4DR	'02-03	SEDAN	✓	✓	✓	7	✓	✓	7	✓	✓	7	✓	✓	7						101,102,128
ES300 4DR	'97-01	SEDAN	✓			6	✓		6	✓		6	✓		6						101,103,125,126,138
ES300h 4DR	'12-18	SEDAN	✓	✓	✓	7	✓	✓	7	✓	✓	7	✓	✓	7						101,102,128
ES330 4DR	'04-06	SEDAN	✓	✓	✓	7	✓	✓	7	✓	✓	7	✓	✓	7						101,102,128
ES350 4DR	'07-18	SEDAN	✓	✓	✓	7	✓	✓	7	✓	✓	7	✓	✓	7						101,102,128
GS 4DR	'13-19	SEDAN	✓	✓	✓	7	✓	✓	7	✓	✓	7	✓	✓	7						101,102,128
GS F 4DR	'13-19	SEDAN	✓	✓	✓	7	✓	✓	7	✓	✓	7	✓	✓	7						101,102,128
GS300 4DR	'06-08	SEDAN	✓	✓	✓	7	✓	✓	7	✓	✓	7	✓	✓	7						101,102,128
GS300 4DR	'02-05	SEDAN	✓	✓	✓	6	✓	✓	6	✓	✓	6	✓	✓	6						101,103,138
GS300 4DR	'98-01	SEDAN	✓	✓	✓	6	✓	✓	6	✓	✓	6	✓	✓	6						101,103,138
GS350 4DR	'06-11	SEDAN	✓	✓	✓	7	✓	✓	7	✓	✓	7	✓	✓	7						101,102,128
GS400 4DR	'98-01	SEDAN	✓	✓	✓	6	✓	✓	6	✓	✓	6	✓	✓	6						101,103,138
GS430 4DR	'06-11	SEDAN	✓	✓	✓	7	✓	✓	7	✓	✓	7	✓	✓	7						101,102,128
GS430 4DR	'02-05	SEDAN	✓	✓	✓	6	✓	✓	6	✓	✓	6	✓	✓	6						101,103,138
GS450h 4DR	'07-11	SEDAN	✓	✓	✓	7	✓	✓	7	✓	✓	7	✓	✓	7						101,102,128
GS460 4DR	'02-11	SEDAN	✓	✓	✓	7	✓	✓	7	✓	✓	7	✓	✓	7						101,102,128
GX460	'10-18	SUV	✓	✓	✓	11	✓	✓	11	✓	✓	11	✓	✓	11						101,102,121,128
GX470	'03-09	SUV	✓	✓	✓	11	✓	✓	11	✓	✓	11	✓	✓	11						101,102,121,128
HS250H 4DR	'10-12	SEDAN	✓	✓	✓	7	✓	✓	7	✓	✓	7	✓	✓	7						101,102,128
IS300 4DR	'01-05	SEDAN	✓	✓	✓	6	✓	✓	6	✓	✓	6	✓	✓	6						101,102,128
IS300 SportCross 5DR	'02-05	HATCH																			134,137
IS 250 4DR	'14-19	SEDAN	✓	✓	✓	7	✓	✓	7	✓	✓	7	✓	✓	7						101,102,128
IS 250 4DR	'06-13	SEDAN	✓	✓	✓	7	✓	✓	7	✓	✓	7	✓	✓	7						101,102,128
IS 350 4DR	'14-19	SEDAN	✓	✓	✓	7	✓	✓	7	✓	✓	7	✓	✓	7						101,102,128
IS 350 4DR	'06-13	SEDAN	✓	✓	✓	7	✓	✓	7	✓	✓	7	✓	✓	7						101,102,128
IS F 4DR	'14-19	SEDAN	✓	✓	✓	7	✓	✓	7	✓	✓	7	✓	✓	7						101,102,128
IS F 4DR	'06-13	SEDAN	✓	✓	✓	7	✓	✓	7	✓	✓	7	✓	✓	7						101,102,128
LS 4DR	'18-19	SEDAN	✓			8															101, 102, 128
LS400 4DR	'95-00	SEDAN	✓	✓	✓	7	✓	✓	7	✓	✓	7	✓	✓	7						101,102,128

506-7250_01

NOTE: THULE STRAP RACKS HAVE BEEN DESIGNED TO FIT VEHICLES WITH STANDARD **FACTORY INSTALLED** SPOILERS, UNLESS OTHERWISE SPECIFIED.
PLEASE NOTE, THULE CANNOT BE RESPONSIBLE FOR FITS ON VEHICLES WITH AFTERMARKET SPOILERS.

THULE REAR MOUNTED RACK FIT INFORMATION

1 *What is my vehicle's make, model and year?*

2 *What do I need in order to put a Thule rack on the back of my vehicle?*

LEXUS continued

		BODY TYPE	TRUNK													BED				SPARE	FIT TIPS
			9001/9001XT/9001PRO RACEWAY 2	9002/9002XT/9002PRO RACEWAY 3	9003/9003XT/9003PRO RACEWAY PLATFORM	FIT DIAL SETTING	9009 / 9009XT ARCHWAY 2	9010 / 9010XT ARCHWAY 3	FIT DIAL SETTING	9006 / 9006XT GATEWAY 2	9007 / 9007XT GATEWAY 3	FIT DIAL SETTING	910XT PASSAGE 2	911XT PASSAGE 3	FIT DIAL SETTING	501 INSTA-GATER	822XT BEDRIDER	823PRO GATE-MATE (MEDIUM)	824PRO GATE-MATE (LARGE)	963PRO SPARE ME PRO	Read the appropriate numbered tips on the last page before fitting vehicle.
LS430 4DR	'01-06	SEDAN	✓	✓	✓	7	✓	✓	7	✓	✓	7	✓	✓	7						101,102,128
LS460 4DR	'15-17	SEDAN																			NO FIT,133
LS460 4DR	'06-14	SEDAN																			NO FIT,133
LX470	'98-07	SUV	✓			10	✓		10	✓		10	✓		10						101,103,121,125,141
LX	'16-19	SUV																			NO FIT,157
LX	'08-15	SUV	✓			10	✓		10	✓		10	✓		10						101,103,121,125,141
NX	'15-19	SUV																			NO FIT,154
RC 350	'15-19	SUV																			NO FIT,133
RC F SPORT	'15-19	SUV																			NO FIT,133
RX300	'98-03	SUV	✓			9	✓		9	✓		9	✓		9						101,103,121,127,138
RX330	'04-06	SUV	✓			9	✓		9	✓		9	✓		9						101,103,121,138
RX	'16-19	SUV																			NO FIT,154
RX L	'19	SUV																			NO FIT,154
RX350	'05-15	SUV																			NO FIT, 154
RX400H	'06-10	SUV																			NO FIT, 154
RX450H	'10-15	SUV																			NO FIT, 154
SC300 2DR	'98-01	COUPE																			135
SC400 2DR	'98-01	COUPE																			135
SC430 2DR	'02-11	COUPE																			135
UX	'19	SUV																			CHECK FOR UPDATE

LINCOLN

Aviator	'19	SUV																			CHECK FOR UPDATE
Aviator	'03-05	SUV	✓	✓	✓	11	✓	✓	11	✓	✓	11	✓	✓	11						101,106,121,128
Continental 4DR	'17-19	SEDAN	✓			7	✓		7	✓		7	✓		7						101,102,140
Continental 4DR	'98-02	SEDAN	✓	✓	✓	6	✓	✓	6	✓	✓	6	✓	✓	6						101,108
LS 4DR	'00-06	SEDAN	✓	✓	✓	7	✓	✓	7	✓	✓	7	✓	✓	7						101,103,128
Mark LT	'06-08	TRUCK														✓	✓		✓		148
MKC	'15-19	HATCH																			NO FIT,157
MKS 4DR	'09-16	SEDAN	✓			7	✓		7	✓		7	✓		7						101,102,116,128
MKT	'10-19	SUV																			NO FIT
MKX	'16-18	SUV																			157
MKX	'11-15	SUV	✓	✓	✓	9	✓	✓	9	✓	✓	9	✓	✓	9						101,102,121,128
MKX	'07-10	SUV	✓	✓	✓	9	✓	✓	9	✓	✓	9	✓	✓	9						101,102,121,138
MKZ	'17-19	SEDAN																			NO FIT,134
MKZ	'13-16	SEDAN	✓			8	✓		8	✓		8	✓		8						101,102,128
MKZ	'07-12	SEDAN	✓			8	✓		8	✓		8	✓		8						101,102,116,128
Nautilus	'19	SUV																			CHECK FOR UPDATE
Navigator	'18-19	SUV																			NO FIT, 154
Navigator	'98-17	SUV	✓	✓	✓	11	✓	✓	11	✓	✓	11	✓	✓	11						101,106,121,128
Town Car 4DR	'98-11	SEDAN	✓	✓	✓	6	✓	✓	6	✓	✓	6	✓	✓	6						101,102,128
Zephyr 4DR	'06	SEDAN	✓			8	✓		8	✓		8	✓		8						101,102,116,128

MAZDA

2 5DR	'16-19	HATCH																			NO FIT,137
2 5DR	'11-15	HATCH	✓			10	✓		10	✓		10	✓		10						101,102,128
3 4DR	'19	SEDAN																			CHECK FOR UPDATE
3 4DR	'14-18	SEDAN	✓	✓	✓	7	✓	✓	7	✓	✓	7	✓	✓	7						101,102,128

506-7250_01

NOTE: THULE STRAP RACKS HAVE BEEN DESIGNED TO FIT VEHICLES WITH STANDARD **FACTORY INSTALLED** SPOILERS, UNLESS OTHERWISE SPECIFIED.
PLEASE NOTE, THULE CANNOT BE RESPONSIBLE FOR FITS ON VEHICLES WITH AFTERMARKET SPOILERS.

THULE REAR MOUNTED RACK FIT INFORMATION

1 *What is my vehicle's make, model and year?*

2 *What do I need in order to put a Thule rack on the back of my vehicle?*

MAZDA continued

		BODY TYPE	TRUNK													BED				SPARE	FIT TIPS
			9001/9001XT/9001PRO RACEWAY 2	9002/9002XT/9002PRO RACEWAY 3	9003/9003XT/9003PRO RACEWAY PLATFORM	FIT DIAL SETTING	9009 / 9009XT ARCHWAY 2	9010 / 9010XT ARCHWAY 3	FIT DIAL SETTING	9006 / 9006XT GATEWAY 2	9007 / 9007XT GATEWAY 3	FIT DIAL SETTING	910XT PASSAGE 2	911XT PASSAGE 3	FIT DIAL SETTING	501 INSTA-GATER	822XT BEDRIDER	823PRO GATE-MATE (MEDIUM)	824PRO GATE-MATE (LARGE)	963PRO SPARE ME PRO	Read the appropriate numbered tips on the last page before fitting vehicle.
3 4DR	'04-13	SEDAN	✓			6	✓		6	✓		6	✓		6						101,102,128
3 5DR	'19	SEDAN																			CHECK FOR UPDATE
3 5DR	'14-18	HATCH	✓	✓	✓	9	✓	✓	9	✓	✓	9	✓	✓	9						101,102,128
3 5DR	'04-13	HATCH	✓	✓	✓	9	✓	✓	9	✓	✓	9	✓	✓	9						101,102,128
5 5DR	'12-17	VAN	✓	✓	✓	10	✓	✓	10	✓	✓	10	✓	✓	10						101,102,128
5 5DR	'06-11	VAN	✓	✓	✓	10	✓	✓	10	✓	✓	10	✓	✓	10						101,102,128
6 4DR	'14-19	SEDAN	✓	✓	✓	7	✓	✓	7	✓	✓	7	✓	✓	7						101,102,128
6 4DR	'09-13	SEDAN	✓	✓	✓	8	✓	✓	8	✓	✓	8	✓	✓	8						101,102,116,128
6 4DR	'03-08	SEDAN	✓	✓	✓	8	✓	✓	8	✓	✓	8	✓	✓	8						101,102,116,128
6 5DR	'04-08	HATCH																			135
6 Wagon	'04-07	WAGON	✓	✓	✓	10	✓	✓	10	✓	✓	10	✓	✓	10						101,102,128
626 4DR	'93-02	SEDAN																			135
B-Series	'94-10	TRUCK														✓	✓	✓			
CX-3	'16-19	HATCH	✓			8	✓		8	✓		8	✓		8						101,102,119,121
CX-5	'17-19	SUV	✓	✓	✓	9	✓	✓	9	✓	✓	9	✓	✓	9						101,102,121,128
CX-5	'12-16	SUV	✓	✓	✓	9	✓	✓	9	✓	✓	9	✓	✓	9						101,102,121,128
CX-7	'07-12	SUV	✓	✓	✓	9	✓	✓	9	✓	✓	9	✓	✓	9						101,102,121,128,151
CX-9	'16-19	SUV																			NO FIT,135
CX-9	'07-15	SUV	✓	✓	✓	10	✓	✓	10	✓	✓	10	✓	✓	10						101,102,121,128
Miata	'90-05	CONVERTIBLE	✓			5	✓		5	✓		5	✓		5						101,103,126,138,156
Millenia 4DR	'95-02	SEDAN																			133
MPV	'00-06	VAN	✓	✓	✓	10	✓	✓	10	✓	✓	10	✓	✓	10						101,102,121,128
MX-5	'16-19	CONVERTIBLE																			135
MX-5	'06-09	CONVERTIBLE																			135
Protege 4DR	'99-03	SEDAN	✓	✓	✓	7	✓	✓	7	✓	✓	7	✓	✓	7						101,102,116,128
Protégé 5 Wagon	'02-03	WAGON																			135,137
RX-8	'04-11	CONVERTIBLE																			135
Tribute	'08-11	SUV	✓	✓	✓	10	✓	✓	10	✓	✓	10	✓	✓	10						101,102,121,128
Tribute	'01-07	SUV	✓	✓	✓	10	✓	✓	10	✓	✓	10	✓	✓	10						101,102,121,128

MERCEDES-BENZ

190 4DR	'92-00	SEDAN																			133
B Class 5DR	'13-17	SUV	✓	✓	✓	10	✓	✓	10	✓	✓	10	✓	✓	10						101,102,116,121,128
B Class 5DR	'10-12	SUV	✓	✓	✓	10	✓	✓	10	✓	✓	10	✓	✓	10						101,102,116,121,128
C Class 2DR	'15-19	COUPE	✓	✓	✓	7	✓	✓	7	✓	✓	7	✓	✓	7						101,102,128
C Class 2DR	'12-14	COUPE	✓	✓	✓	7	✓	✓	7	✓	✓	7	✓	✓	7						101,102,128
C Class 2DR	'05-07	COUPE	✓	✓	✓	7	✓	✓	7	✓	✓	7	✓	✓	7						101,102,116,128
C Class 2DR	'02-04	COUPE																			134
C Class 4DR	'15-19	SEDAN	✓	✓	✓	7	✓	✓	7	✓	✓	7	✓	✓	7						101,102,128
C Class 4DR	'07-14	SEDAN	✓	✓	✓	7	✓	✓	7	✓	✓	7	✓	✓	7						101,102,116,128
C Class 4DR	'05-06	SEDAN	✓	✓	✓	7	✓	✓	7	✓	✓	7	✓	✓	7						101,102,116,128
C Class 4DR	'01-04	SEDAN	✓	✓	✓	7	✓	✓	7	✓	✓	7	✓	✓	7						101,102,128
C Class 4DR	'92-00	SEDAN																			133
C Class Wagon	'18-19	WAGON																			CHECK FOR UPDATE
C Class Wagon	'08-12	WAGON																			134
C Class Wagon	'05-06	WAGON																			134
C Class Wagon	'02-04	WAGON																			134
CL Class 2DR	'11-14	COUPE	✓	✓	✓	7	✓	✓	7	✓	✓	7	✓	✓	7						101,102,128

FIT TIPS
Read the appropriate numbered tips on the last page before fitting vehicle.

506-7250_01

NOTE: THULE STRAP RACKS HAVE BEEN DESIGNED TO FIT VEHICLES WITH STANDARD **FACTORY INSTALLED** SPOILERS, UNLESS OTHERWISE SPECIFIED.
PLEASE NOTE, THULE CANNOT BE RESPONSIBLE FOR FITS ON VEHICLES WITH AFTERMARKET SPOILERS.

THULE REAR MOUNTED RACK FIT INFORMATION

1 *What is my vehicle's make, model and year?*

2 *What do I need in order to put a Thule rack on the back of my vehicle?*

MERCEDES-BENZ continued

		BODY TYPE	TRUNK													BED				SPARE	FIT TIPS
			9001/9001XT/9001PRO RACEWAY 2	9002/9002XT/9002PRO RACEWAY 3	9003/9003XT/9003PRO RACEWAY PLATFORM	FIT DIAL SETTING	9009 / 9009XT ARCHWAY 2	9010 / 9010XT ARCHWAY 3	FIT DIAL SETTING	9006 / 9006XT GATEWAY 2	9007 / 9007XT GATEWAY 3	FIT DIAL SETTING	910XT PASSAGE 2	911XT PASSAGE 3	FIT DIAL SETTING	501 INSTA-GATER	822XT BEDRIDER	823PRO GATE-MATE (MEDIUM)	824PRO GATE-MATE (LARGE)	963PRO SPARE ME PRO	Read the appropriate numbered tips on the last page before fitting vehicle.
CL Class 2DR	'07-10	COUPE	✓	✓	✓	7	✓	✓	7	✓	✓	7	✓	✓	7						101,102,128
CLA Class 4DR	'14-19	SEDAN	✓			7	✓		7	✓		7	✓		7						101,102,129,138
CLS Class 2DR	'06-12	COUPE																			135
CLS Class 4DR	'11-19	SEDAN	✓	✓	✓	7	✓	✓	7	✓	✓	7	✓	✓	7						101,102,128
E Class 2DR	'18-19	COUPE																			CHECK FOR UPDATE
E Class 2DR	'10-16	COUPE																			135
E-Class 4DR	'17-19	SEDAN																			NO FIT,146
E-Class 4DR	'10-16	SEDAN	✓	✓	✓	7	✓	✓	6	✓	✓	6	✓	✓	6						101,102,138
E-Class 4DR	'96-09	SEDAN	✓	✓	✓	7	✓	✓	6	✓	✓	6	✓	✓	6						101,102,138
E Class Wagon	'17-19	WAGON																			CHECK FOR UPDATE
E Class Wagon	'11-16	WAGON																			134
E Class Wagon	'04-10	WAGON																			134
E Class Wagon	'98-03	WAGON																			134
G Class	'19	SUV																			144
G Class	'02-18	SUV																			144
GL Class	'13-16	SUV																			135
GL Class	'06-12	SUV																			135
GLA Class	'14-19	SUV																			NO FIT,137
GLC Class	'16-19	SUV																			NO FIT,137
GLE Coupe	'16-19	CROSSOVER																			NO FIT
GLE Class	'16-19	SUV																			NO FIT,137
GLK	'09-15	SUV																			134
GLS Class	'17-19	SUV																			135
Metris	'16-19	VAN	✓	✓	✓	10															101,102,121,128
M Class	'12-15	SUV	✓	✓		9	✓	✓	9	✓	✓	9	✓	✓	9						101,102,121,128
M Class	'06-11	SUV	✓	✓		9	✓	✓	9	✓	✓	9	✓	✓	9						101,102,121,128
M Class	'98-05	SUV																			134,137
R Class	'06-12	SUV	✓	✓	✓	10	✓	✓	10	✓	✓	10	✓	✓	10						101,102,123
S Class 4DR	'00-19	SEDAN																			NO FIT
SL Class 2DR	'05-19	CONVERTIBLE																			NO FIT
SLC Class 2DR	'17-19	CONVERTIBLE																			NO FIT
SLK Class 2DR	'05-16	CONVERTIBLE																			NO FIT

MERCURY

Cougar 2DR	'99-02	COUPE																			135
Grand Marquis 4DR	'92-09	SEDAN	✓			6	✓		6	✓		6	✓		6						101,105,116
Mariner	'05-10	SUV	✓	✓	✓	10	✓	✓	10	✓	✓	10	✓	✓	10						101,102,121,128
Marauder 4DR	'03-04	SEDAN	✓			6	✓		6	✓		6	✓		6						101,105,116
Milan 4DR	'06-10	SEDAN	✓			8	✓		8	✓		8	✓		8						101,102,116,128
Montego 4DR	'05-07	SEDAN	✓	✓	✓	8	✓	✓	8	✓	✓	8	✓	✓	8						101,102,116,128
Monterey	'04-07	VAN	✓	✓	✓	10	✓	✓	10	✓	✓	10	✓	✓	10						101,102,121,138
Mountaineer	'02-10	SUV	✓	✓	✓	10	✓	✓	10	✓	✓	10	✓	✓	10						101,102,121,128
Mountaineer	'96-01	SUV	✓	✓	✓	10	✓	✓	10	✓	✓	10	✓	✓	10						101,102,121
Mystique 2DR	'95-00	COUPE	✓			6	✓		6	✓		6	✓		6						101,103,118
Sable 4DR	'08-09	SEDAN	✓			8	✓		8	✓		8	✓		8						101,102,116,128
Sable 4DR	'00-05	SEDAN	✓			6	✓		6	✓		6	✓		6						101,106,126
Sable Wagon	'96-05	WAGON	✓	✓	✓	9	✓	✓	9	✓	✓	9	✓	✓	9						101,106,121
Villager	'99-02	VAN	✓	✓	✓	10	✓	✓	10	✓	✓	10	✓	✓	10						101,102,121,128

506-7250_01

NOTE: THULE STRAP RACKS HAVE BEEN DESIGNED TO FIT VEHICLES WITH STANDARD **FACTORY INSTALLED** SPOILERS, UNLESS OTHERWISE SPECIFIED.
PLEASE NOTE, THULE CANNOT BE RESPONSIBLE FOR FITS ON VEHICLES WITH AFTERMARKET SPOILERS.

THULE REAR MOUNTED RACK FIT INFORMATION

1 *What is my vehicle's make, model and year?*

2 *What do I need in order to put a Thule rack on the back of my vehicle?*

FIT TIPS
Read the appropriate numbered tips on the last page before fitting vehicle.

MINI

		BODY TYPE	TRUNK													BED				SPARE	FIT TIPS
			9001/9001XT/9001PRO RACEWAY 2	9002/9002XT/9002PRO RACEWAY 3	9003/9003XT/9003PRO RACEWAY PLATFORM	FIT DIAL SETTING	9009 / 9009XT ARCHWAY 2	9010 / 9010XT ARCHWAY 3	FIT DIAL SETTING	9006 / 9006XT GATEWAY 2	9007 / 9007XT GATEWAY 3	FIT DIAL SETTING	910XT PASSAGE 2	911XT PASSAGE 3	FIT DIAL SETTING	501 INSTA-GATER	822XT BEDRIDER	823PRO GATE-MATE (MEDIUM)	824PRO GATE-MATE (LARGE)	963PRO SPARE ME PRO	
Clubman	'16-19	MINI																			NO FIT,146
Clubman	'08-14	MINI																			NO FIT,135
Clubvan	'13	MINI																			NO FIT,135
Cooper	'03-13	MINI																			NO FIT
Cooper Coupe	'12-15	MINI																			NO FIT
Cooper Roadster	'12-15	MINI																			NO FIT,135
Countryman	'17-19	MINI																			CHECK FOR UPDATE
Countryman	'11-16	MINI																			135
Hardtop 2 Door	'14-19	MINI																			NO FIT,146
Hardtop 4 Door	'14-19	MINI																			NO FIT,146
Paceman	'13-16	MINI																			NO FIT,135

MITSUBISHI

Diamante 4DR	'97-04	SEDAN	✓	✓	✓	7	✓	✓	7	✓	✓	7	✓	✓	7						101,102,128
Eclipse 2DR	'10-12	COUPE																			134,135
Eclipse 2DR	'06-09	COUPE																			134,135
Eclipse 2DR	'95-03	COUPE																			134,135
Eclipse Cross	'18-19	SUV																			NO FIT, 135
Endeavor	'04-11	SUV	✓	✓	✓	10	✓	✓	10	✓	✓	10	✓	✓	10						101,102,121,128
Galant 4DR	'04-12	SEDAN	✓	✓	✓	7	✓	✓	7	✓	✓	7	✓	✓	7						101,102,128
Galant 4DR	'97-03	SEDAN	✓	✓	✓	6	✓	✓	6	✓	✓	6	✓	✓	6						101,102,128
Galant GTZ 4DR	'99-03	SEDAN																			NO FIT,135
Lancer 4DR	'08-17	SEDAN	✓	✓	✓	7	✓	✓	7	✓	✓	7	✓	✓	7						101,102,128
Lancer 4DR	'02-07	SEDAN	✓	✓	✓	7	✓	✓	7	✓	✓	7	✓	✓	7						101,102,128
Lancer Sportback	'10-17	SPORTBACK																			NO FIT,137
Lancer Sportback	'04-05	SPORTBACK																			NO FIT,134
MiEV 5DR	'12-17	HATCH	✓	✓	✓	8	✓	✓	8	✓	✓	8									102,102,121,138
Mirage 2DR	'00-02	COUPE	✓	✓	✓	6	✓	✓	6	✓	✓	6	✓	✓	6						101,108,128
Mirage 4DR	'00-01	SEDAN	✓	✓	✓	6	✓	✓	6	✓	✓	6	✓	✓	6						101,108,128
Mirage G4 4DR	'17-19	SEDAN	✓	✓	✓	8	✓	✓	8	✓	✓	8	✓	✓	8						101,102,128
Mirage 5DR	'14-19	HATCH																			NO FIT,137
Montero Sport	'97-04	SUV																		✓	
Outlander	'14-19	SUV	✓	✓	✓	10	✓	✓	10	✓	✓	10	✓	✓	10						102,102,121,128
Outlander	'07-13	SUV																			NO FIT,134
Outlander	'03-06	SUV																			NO FIT,134
Outlander Sport	'11-19	SUV																			NO FIT,134
Raider	'06-10	TRUCK														✓	✓	✓			148
RVR (Canada)	'11-19	SUV																			NO FIT,134

NISSAN

350Z	'03-09	COUPE																			133
370Z	'09-19	COUPE																			133
Altima 2DR	'13	COUPE					✓		7	✓		7	✓		7						101,102,138
Altima 2DR	'08-12	COUPE					✓		7	✓		7	✓		7						101,102,138
Altima 4DR	'19	SEDAN																			CHECK FOR UPDATE
Altima 4DR	'13-18	SEDAN	✓	✓	✓	8	✓	✓	8	✓	✓	8	✓	✓	8						101,102,128
Altima 4DR	'07-12	SEDAN	✓	✓	✓	8	✓	✓	8	✓	✓	8	✓	✓	8						101,102,128
Altima 4DR	'02-06	SEDAN	✓	✓	✓	7	✓	✓	7	✓	✓	7	✓	✓	7						101,102,138
Altima 4DR	'98-01	SEDAN	✓			6	✓		6	✓		6	✓		6						101,102,139,140

506-7250_01

NOTE: THULE STRAP RACKS HAVE BEEN DESIGNED TO FIT VEHICLES WITH STANDARD **FACTORY INSTALLED** SPOILERS, UNLESS OTHERWISE SPECIFIED.
PLEASE NOTE, THULE CANNOT BE RESPONSIBLE FOR FITS ON VEHICLES WITH AFTERMARKET SPOILERS.

THULE REAR MOUNTED RACK FIT INFORMATION

1 *What is my vehicle's make, model and year?*

2 *What do I need in order to put a Thule rack on the back of my vehicle?*

NISSAN continued		BODY TYPE	TRUNK													BED				SPARE	FIT TIPS
			9001/9001XT/9001PRO RACEWAY 2	9002/9002XT/9002PRO RACEWAY 3	9003/9003XT/9003PRO RACEWAY PLATFORM	FIT DIAL SETTING	9009 / 9009XT ARCHWAY 2	9010 / 9010XT ARCHWAY 3	FIT DIAL SETTING	9006 / 9006XT GATEWAY 2	9007 / 9007XT GATEWAY 3	FIT DIAL SETTING	910XT PASSAGE 2	911XT PASSAGE 3	FIT DIAL SETTING	501 INSTA-GATER	822XT BEDRIDER	823PRO GATE-MATE (MEDIUM)	824PRO GATE-MATE (LARGE)	963PRO SPARE ME PRO	Read the appropriate numbered tips on the last page before fitting vehicle.
Armada	'17-19	SUV																			NO FIT,137
Armada	'08-15	SUV	✓	✓	✓	11	✓	✓	11	✓	✓	11	✓	✓	11						101,112,121,128
Armada	'04-07	SUV	✓	✓	✓	11	✓	✓	11	✓	✓	11	✓	✓	11						101,112,121,128
Cube	'09-14	SUV	✓	✓	✓	11	✓	✓	11	✓	✓	11	✓	✓	11						101,102,119,121
Frontier	'05-19	TRUCK														✓	✓	✓			148
Frontier	'98-04	TRUCK														✓	✓	✓			148
GT-R 2DR	'08-19	COUPE																			NO FIT
Juke 5DR	'11-18	SUV	✓	✓	✓	9	✓	✓	9	✓	✓	9	✓	✓	9						101,102,121,138
Kicks 5DR	'19	SUV	✓	✓	✓	9	✓		9	✓		9	✓		9						101,102,121,128, 155
Leaf 5DR	'18-19	HATCH																			NO FIT
Leaf 5DR	'11-17	HATCH																			NO FIT
Maxima 4DR	'16-19	SEDAN	✓	✓	✓	7	✓	✓	7	✓	✓	7	✓	✓	7						101,102,128
Maxima 4DR	'09-15	SEDAN	✓			7	✓		7	✓		7	✓		7						101,102,116,128
Maxima 4DR	'04-08	SEDAN	✓	✓	✓	8	✓	✓	8	✓	✓	8	✓	✓	8						101,102,128
Maxima 4DR	'00-03	SEDAN	✓	✓	✓	6	✓	✓	6	✓	✓	6	✓	✓	6						101,103,125,128
Micra 5DR (Canada)	'15-18	HATCH	✓	✓	✓	9	✓	✓	9	✓	✓	9	✓	✓	10						101,102,121,128
Murano	'15-19	SUV	✓			10	✓		10	✓		10	✓		10						101,102,121,128
Murano	'03-14	SUV	✓			10	✓		10	✓		10	✓		10						101,102,121,141
Murano CrossCabriolet	'11-14	CONVERTIBLE																			NO FIT
NV200 Van	'13-19	VAN																			NO FIT
NV 1500 / 2500 / 3500 Van	'12-19	VAN																			NO FIT
Pathfinder	'13-19	SUV	✓	✓	✓	9	✓	✓	9	✓	✓	9	✓	✓	9						101,102,121,128
Pathfinder	'05-12	SUV	✓	✓	✓	11	✓	✓	11	✓	✓	11	✓	✓	11						101,102,121,128
Pathfinder	'96-04	SUV	✓	✓	✓	10	✓	✓	10	✓	✓	10	✓	✓	10						101,102,121,128
Pathfinder w/ Spare	'96-01	SUV																		✓	
Quest	'12-17	VAN	✓	✓	✓	11	✓	✓	11	✓	✓	11	✓	✓	11						101,102,121,128
Quest	'04-11	VAN	✓	✓	✓	11	✓	✓	11	✓	✓	11	✓	✓	11						101,102,121,128
Quest	'99-02	VAN	✓	✓	✓	10	✓	✓	10	✓	✓	10	✓	✓	10						101,102,121,128
Rogue	'14-19	SUV																			NO FIT, 154
Rogue	'08-13	SUV	✓	✓	✓	10	✓	✓	10	✓	✓	10	✓	✓	10						101,102,121,128,151
Rogue Select	'14-15	SUV	✓	✓	✓	10	✓	✓	10	✓	✓	10	✓	✓	10						101,102,121,128,151
Rogue Sport	'18-19	SUV																			NO FIT,154
Sentra 4DR	'13-19	SEDAN	✓	✓	✓	8	✓	✓	8	✓	✓	8	✓	✓	8						101,102,128
Sentra 4DR	'07-12	SEDAN	✓	✓	✓	8	✓	✓	8	✓	✓	8	✓	✓	8						101,102,128
Sentra 4DR	'00-06	SEDAN	✓	✓	✓	7	✓	✓	7	✓	✓	7	✓	✓	7						101,102,116,128
Titan	'17-19	TRUCK																	✓		148
Titan	'14-16	TRUCK														✓			✓		148
Titan	'04-13	TRUCK														✓			✓		148
Titan XD	'16-19	TRUCK																	✓		148
Versa 4DR	'18-19	SEDAN																			CHECK FOR UPDATE
Versa 4DR	'12-17	SEDAN	✓	✓	✓	7	✓	✓	7	✓	✓	7	✓	✓	7						101,102,128
Versa 4DR	'07-11	SEDAN	✓	✓	✓	8	✓	✓	8	✓	✓	8	✓	✓	8						101,102,128
Versa 5DR	'07-13	HATCH	✓	✓	✓	9	✓	✓	9	✓	✓	9	✓	✓	9						101,102,121,128
Versa Note 5DR	'18-19	HATCH																			CHECK FOR UPDATE
Versa Note 5DR	'14-17	HATCH	✓	✓	✓	10	✓	✓	10	✓	✓	10	✓	✓	10						101,102,121,128
Xterra	'05-16	SUV	✓	✓	✓	11	✓	✓	11	✓	✓	11	✓	✓	11						101,102,121,128
Xterra	'00-04	SUV	✓	✓	✓	11	✓	✓	11	✓	✓	11	✓	✓	11						101,121,125,128,130
X-Trail	'01-08	SUV	✓	✓	✓	11	✓	✓	11	✓	✓	11	✓	✓	11						101,102,121,128

506-7250_01

NOTE: THULE STRAP RACKS HAVE BEEN DESIGNED TO FIT VEHICLES WITH STANDARD **FACTORY INSTALLED** SPOILERS, UNLESS OTHERWISE SPECIFIED.
PLEASE NOTE, THULE CANNOT BE RESPONSIBLE FOR FITS ON VEHICLES WITH AFTERMARKET SPOILERS.

THULE REAR MOUNTED RACK FIT INFORMATION

1 *What is my vehicle's make, model and year?*

2 *What do I need in order to put a Thule rack on the back of my vehicle?*

FIT TIPS
Read the appropriate numbered tips on the last page before fitting vehicle.

OLDSMOBILE

		BODY TYPE	TRUNK													BED				SPARE	FIT TIPS
			9001/9001XT/9001PRO RACEWAY 2	9002/9002XT/9002PRO RACEWAY 3	9003/9003XT/9003PRO RACEWAY PLATFORM	FIT DIAL SETTING	9009 / 9009XT ARCHWAY 2	9010 / 9010XT ARCHWAY 3	FIT DIAL SETTING	9006 / 9006XT GATEWAY 2	9007 / 9007XT GATEWAY 3	FIT DIAL SETTING	910XT PASSAGE 2	911XT PASSAGE 3	FIT DIAL SETTING	501 INSTA-GATER	822XT BEDRIDER	823PRO GATE-MATE (MEDIUM)	824PRO GATE-MATE (LARGE)	963PRO SPARE ME PRO	
Alero 2DR	'99-04	COUPE	✓			5	✓		5	✓		5	✓		5						101,126,128,142
Alero 4DR	'99-04	SEDAN	✓			5	✓		5	✓		5	✓		5						101,126,128,142
Aurora 4DR	'01-03	SEDAN	✓	✓	✓	7	✓	✓	7	✓	✓	7	✓	✓	7						101,102,128
Aurora 4DR	'95-00	SEDAN																			135
Bravada	'02-04	SUV																		✓	135,137
Bravada	'96-01	SUV																		✓	135,137,144
Intrigue 4DR	'97-02	SEDAN																			135
Silhouette	'97-04	VAN	✓	✓	✓	10	✓	✓	10	✓	✓	10	✓	✓	10						101,102,121,138

PONTIAC

Aztek	'01-05	SUV	✓			10	✓		10	✓		10	✓		10						101,112,121,125,138
Bonneville 4DR	'00-05	SEDAN	✓	✓	✓	7	✓	✓	7	✓	✓	7	✓	✓	7						101,102,128
G3 5DR	'08-10	HATCH	✓			9	✓		9	✓		9	✓		9						101,128,147
G3 Wave 5DR (Canada)	'08-10	HATCH	✓			9	✓		9	✓		9	✓		9						101,128,147
G5 2DR	'07-09	COUPE	✓	✓	✓	7	✓	✓	7	✓	✓	7	✓	✓	7						101,102,128
G5 4DR	'07-09	SEDAN	✓	✓	✓	7	✓	✓	7	✓	✓	7	✓	✓	7						101,110,128
G6 Coupe	'06-09	COUPE	✓	✓	✓	7	✓	✓	7	✓	✓	7	✓	✓	7						101,102,128
G6 4DR	'05-09	SEDAN	✓	✓	✓	7	✓	✓	7	✓	✓	7	✓	✓	7						101,102,128
G8 4DR	'08-09	SEDAN	✓	✓	✓	7	✓	✓	7	✓	✓	7	✓	✓	7						101,102,128
Grand Am 2DR	'99-05	COUPE	✓			5	✓		5	✓		5	✓		5						101,126,128,142
Grand Am 4DR	'99-05	SEDAN	✓			5	✓		5	✓		5	✓		5						101,126,128,142
Grand Prix 2DR	'97-02	COUPE	✓	✓	✓	7	✓	✓	7	✓	✓	7	✓	✓	7						101,102,128
Grand Prix 4DR	'04-08	SEDAN	✓	✓	✓	7	✓	✓	7	✓	✓	7	✓	✓	7						101,102,128
Grand Prix 4DR	'97-03	SEDAN	✓	✓	✓	7	✓	✓	7	✓	✓	7	✓	✓	7						101,102,128
GTO 2DR	'04-06	COUPE																			146
Montana	'99-05	VAN	✓	✓	✓	10	✓	✓	10	✓	✓	10	✓	✓	10						101,102,121,138
Montana SV6	'05-06	VAN	✓	✓	✓	11	✓	✓	11	✓	✓	11	✓	✓	11						101,102,121,128
Solstice	'06-09	CONVERTIBLE																			137
Sunfire 2DR	'95-05	COUPE	✓			7	✓		7	✓		7	✓		7						101,142
Sunfire 4DR	'95-05	SEDAN	✓			7	✓		7	✓		7	✓		7						101,142
Torrent	'06-09	SUV	✓	✓	✓	11	✓	✓	11	✓	✓	11	✓	✓	11						101,112,121,128
Vibe	'03-10	HATCH	✓	✓	✓	9	✓	✓	9	✓	✓	9	✓	✓	9						101,102,121,128

PORSCHE

Boxter	'96-16	CONVERTIBLE																			135
Cayenne	'19	SUV																			NO FIT
Cayenne	'11-18	SUV	✓	✓	✓	10	✓	✓	10	✓	✓	10	✓	✓	10						101,102,121,128
Cayenne	'03-10	SUV	✓	✓	✓	10	✓	✓	10	✓	✓	10	✓	✓	10						101,102,121,128
Cayman	'14-19	COUPE																			135
Cayman	'06-13	COUPE																			135
Macan	'14-19	SUV																			NO FIT,135
Panamera 4DR	'17-19	SPORTBACK																			NO FIT,146
Panamera 4DR	'10-16	SPORTBACK																			134
Panamera Sport Turismo 5DR	'18-19	WAGON																			NO FIT,146

SAAB

9-2x 5DR	'05-06	HATCH	✓	✓	✓	8	✓	✓	8	✓	✓	8	✓	✓	8						101,102,121,127,128
9-3 3DR	'99-02	HATCH	✓	✓	✓	7	✓	✓	7	✓	✓	7	✓	✓	7						101,102,121,138
9-3 4DR	'06-12	SEDAN	✓	✓	✓	7	✓	✓	7	✓	✓	7	✓	✓	7						101,102,128

506-7250_01

NOTE: THULE STRAP RACKS HAVE BEEN DESIGNED TO FIT VEHICLES WITH STANDARD **FACTORY INSTALLED** SPOILERS, UNLESS OTHERWISE SPECIFIED.
PLEASE NOTE, THULE CANNOT BE RESPONSIBLE FOR FITS ON VEHICLES WITH AFTERMARKET SPOILERS.

THULE REAR MOUNTED RACK FIT INFORMATION

1 *What is my vehicle's make, model and year?*

2 *What do I need in order to put a Thule rack on the back of my vehicle?*

SAAB continued

		BODY TYPE	TRUNK													BED				SPARE	FIT TIPS
			9001/9001XT/9001PRO RACEWAY 2	9002/9002XT/9002PRO RACEWAY 3	9003/9003XT/9003PRO RACEWAY PLATFORM	FIT DIAL SETTING	9009 / 9009XT ARCHWAY 2	9010 / 9010XT ARCHWAY 3	FIT DIAL SETTING	9006 / 9006XT GATEWAY 2	9007 / 9007XT GATEWAY 3	FIT DIAL SETTING	910XT PASSAGE 2	911XT PASSAGE 3	FIT DIAL SETTING	501 INSTA-GATER	822XT BEDRIDER	823PRO GATE-MATE (MEDIUM)	824PRO GATE-MATE (LARGE)	963PRO SPARE ME PRO	Read the appropriate numbered tips on the last page before fitting vehicle.
9-3 4DR	'03-05	SEDAN	✓	✓	✓	8	✓	✓	8	✓	✓	8	✓	✓	8						101,102,128
9-3 Convertible	'06-12	CONVERTIBLE	✓	✓	✓	7	✓	✓	7	✓	✓	7	✓	✓	7						101,102,128,156
9-3 Convertible	'03-05	CONVERTIBLE	✓	✓	✓	7	✓	✓	7	✓	✓	7	✓	✓	7						101,102,128,156
9-3 5DR	'99-03	HATCH	✓	✓	✓	7	✓	✓	7	✓	✓	7	✓	✓	7						101,102,121,138
9-3 Sport Combi Wagon	'06-12	WAGON	✓			9	✓		9	✓		9	✓		9						101,102,121,128
9-3x 5DR	'10-12	WAGON																			134
9-4x	'10-12	SUV	✓	✓	✓	10	✓	✓	10	✓	✓	10	✓	✓	10						101,102,121,128,129
9-5 4DR	'10-12	SEDAN	✓	✓	✓	7	✓	✓	7	✓	✓	7	✓	✓	7						101,102,128
9-5 4DR	'99-09	SEDAN	✓	✓	✓	7	✓	✓	7	✓	✓	7	✓	✓	7						101,102,128
9-5 Wagon	'99-12	WAGON	✓	✓	✓	9	✓	✓	9	✓	✓	9	✓	✓	9						101,102,121,128
9-7x	'05-09	SUV																			135,137

SATURN

Astra 3DR	'08-10	HATCH	✓	✓	✓	7	✓	✓	7	✓	✓	7	✓	✓	7						101,102,127,128
Astra 5DR	'08-10	HATCH	✓	✓	✓	7	✓	✓	7	✓	✓	7	✓	✓	7						101,102,127,128
Aura 4DR	'07-10	SEDAN	✓	✓	✓	7	✓	✓	7	✓	✓	7	✓	✓	7						101,102,127,128
Ion 2DR	'03-08	COUPE																			NO FIT,133
Ion 4DR	'03-08	SEDAN	✓	✓	✓	7	✓	✓	7	✓	✓	7	✓	✓	7						101,102,128
LS 4DR	'00-04	SEDAN	✓	✓	✓	7	✓	✓	7	✓	✓	7	✓	✓	7						101,102,128
LW Wagon	'00-04	WAGON	✓	✓	✓	9	✓	✓	9	✓	✓	9	✓	✓	9						101,121,128,142
Outlook	'07-10	SUV	✓	✓	✓	9	✓	✓	9	✓	✓	9	✓	✓	9						101,102,121,128
Relay	'05-07	VAN	✓	✓	✓	11	✓	✓	11	✓	✓	11	✓	✓	11						101,102,121,128
SC 2DR	'97-02	COUPE																			135
SC 3DR	'97-02	HATCH																			135
Sky	'07-10	CONVERTIBLE																			146
SL 4DR	'96-02	SEDAN	✓			6	✓		6	✓		6	✓		6						101,108
SW Wagon	'93-01	WAGON	✓			8	✓		8	✓		8	✓		8						101,102,121,126
Vue	'08-10	SUV																			134
Vue	'02-07	SUV	✓	✓	✓	11	✓	✓	11	✓	✓	11	✓	✓	11						101,112,121,128

SCION

FR-S	'13-16	COUPE	✓	✓	✓	6	✓	✓	6	✓	✓	6									101,102,128,155
iA 4DR	'16	SEDAN	✓			7	✓		7	✓		7	✓		7						101,102,128
iM 5DR	'16	HATCH	✓	✓	✓	9	✓	✓	9	✓	✓	9	✓	✓	9						101,102,121,128
iQ 3DR	'12-15	HATCH	✓	✓	✓	8	✓	✓	8	✓	✓	8	✓	✓	8						101,102,121,128
tC 2DR	'11-16	COUPE																			137
tC 2DR	'04-10	COUPE																			134
xA 5DR	'04-07	HATCH	✓	✓	✓	9	✓	✓	9	✓	✓	9	✓	✓	9						101,102,121,128
xB 5DR	'08-15	SUV	✓	✓	✓	11	✓	✓	11	✓	✓	11	✓	✓	11						101,102,121,128
xB 5DR	'04-07	SUV																			135
xD 5DR	'08-14	HATCH	✓			10	✓		10	✓		10	✓		10						101,102,116,121,128

SMART

Fortwo 3DR	'16-19	HATCH																			135
Fortwo 3DR	'08-15	HATCH																			135

SUBARU

Ascent	'19	SUV																			NO FIT, 154
Baja	'03-07	TRUCK																			146

FIT TIPS

Read the appropriate numbered tips on the last page before fitting vehicle.

506-7250_01

NOTE: THULE STRAP RACKS HAVE BEEN DESIGNED TO FIT VEHICLES WITH STANDARD **FACTORY INSTALLED** SPOILERS, UNLESS OTHERWISE SPECIFIED.
PLEASE NOTE, THULE CANNOT BE RESPONSIBLE FOR FITS ON VEHICLES WITH AFTERMARKET SPOILERS.

THULE REAR MOUNTED RACK FIT INFORMATION

THULE SWEDEN

1 *What is my vehicle's make, model and year?*

2 *What do I need in order to put a Thule rack on the back of my vehicle?*

SUBARU continued		BODY TYPE	TRUNK													BED				SPARE	FIT TIPS
			9001/9001XT/9001PRO RACEWAY 2	9002/9002XT/9002PRO RACEWAY 3	9003/9003XT/9003PRO RACEWAY PLATFORM	FIT DIAL SETTING	9009 / 9009XT ARCHWAY 2	9010 / 9010XT ARCHWAY 3	FIT DIAL SETTING	9006 / 9006XT GATEWAY 2	9007 / 9007XT GATEWAY 3	FIT DIAL SETTING	910XT PASSAGE 2	911XT PASSAGE 3	FIT DIAL SETTING	501 INSTA-GATER	822XT BEDRIDER	823PRO GATE-MATE (MEDIUM)	824PRO GATE-MATE (LARGE)	963PRO SPARE ME PRO	Read the appropriate numbered tips on the last page before fitting vehicle.
BRZ	'13-19	COUPE	✓	✓	✓	6	✓	✓	6	✓	✓	6									101,102,128,155
Crosstrek	'18-19	HATCH	✓			9	✓		9	✓		9	✓		9						101,102,121,128
Forester	'19	SUV																			CHECK FOR UPDATE
Forester	'14-18	SUV	✓	✓	✓	9	✓	✓	10	✓	✓	10	✓	✓	10						101,102,121,128
Forester	'09-13	SUV	✓	✓	✓	10	✓	✓	10	✓	✓	10	✓	✓	10						101,102,121,128
Forester	'03-08	SUV	✓	✓	✓	10	✓	✓	10	✓	✓	10	✓	✓	10						101,102,121,128
Forester	'98-02	SUV	✓	✓	✓	9	✓	✓	9	✓	✓	9	✓	✓	9						101,102,128
Impreza 2DR	'95-01	COUPE	✓			6	✓		6	✓		6	✓		6						101,111
Impreza 4DR	'17-19	SEDAN	✓			7	✓		7	✓		7	✓		7						101,102,128
Impreza 4DR	'12-16	SEDAN	✓	✓	✓	7	✓	✓	7	✓	✓	7	✓	✓	7						101,102,128
Impreza 4DR	'08-11	SEDAN	✓	✓	✓	7	✓	✓	7	✓	✓	7	✓	✓	7						101,102,128
Impreza 4DR	'02-07	SEDAN	✓	✓	✓	6	✓	✓	6	✓	✓	6	✓	✓	6						101,102,128
Impreza 4DR	'93-01	SEDAN	✓			5	✓		5	✓		5	✓		5						101,102,139
Impreza WRX / WRX STI 4DR (w/o Spoiler)	'12-14	SEDAN	✓	✓	✓	7	✓	✓	7	✓	✓	7	✓	✓	7						101,102,128
Impreza WRX / WRX STI 4DR (w/o Spoiler)	'08-11	SEDAN	✓	✓	✓	7	✓	✓	7	✓	✓	7	✓	✓	7						101,102,128
Impreza WRX / WRX STI 4DR (w/o Spoiler)	'02-07	SEDAN	✓	✓	✓	6	✓	✓	6	✓	✓	6	✓	✓	6						101,102,128
Impreza WRX / WRX STI 4DR (w/o Spoiler)	'93-01	SEDAN	✓			5	✓		5	✓		5	✓		5						101,102,139
Impreza 5DR	'17-19	HATCH	✓			9	✓		9	✓		9	✓		9						101,102,121,128
Impreza 5DR	'12-16	HATCH	✓	✓	✓	8	✓	✓	8	✓	✓	8	✓	✓	8						101,102,121,128
Impreza 5DR	'08-11	HATCH	✓	✓	✓	8	✓	✓	8	✓	✓	8	✓	✓	8						101,102,121,127,128
Impreza 5DR	'02-07	HATCH	✓	✓	✓	8	✓	✓	8	✓	✓	8	✓	✓	8						101,102,121,127,128
Impreza Sport 5DR	'17-19	HATCH	✓			9	✓		9	✓		9	✓		9						101,102,121,128
Impreza Sport 5DR	'12-16	HATCH	✓	✓	✓	8	✓	✓	8	✓	✓	8	✓	✓	8						101,102,121,128
Impreza WRX / WRX STI 5DR (w/o Spoiler)	'12-14	HATCH	✓	✓	✓	8	✓	✓	8	✓	✓	8	✓	✓	8						101,102,121,127,128
Impreza WRX / WRX STI 5DR (w/o Spoiler)	'08-11	HATCH	✓	✓	✓	8	✓	✓	8	✓	✓	8	✓	✓	8						101,102,121,127,128
Impreza WRX / WRX STI 5DR (w/o Spoiler)	'02-07	HATCH	✓	✓	✓	8	✓	✓	8	✓	✓	8	✓	✓	8						101,102,121,127,128
Legacy 4DR	'15-19	SEDAN	✓	✓	✓	8	✓	✓	8	✓	✓	8	✓	✓	8						101,102,128
Legacy 4DR	'10-14	SEDAN	✓	✓	✓	8	✓	✓	8	✓	✓	8	✓	✓	8						101,102,128
Legacy 4DR	'05-09	SEDAN	✓	✓	✓	8	✓	✓	8	✓	✓	8	✓	✓	8						101,128,147
Legacy 4DR	'00-04	SEDAN	✓	✓	✓	7	✓	✓	7	✓	✓	7	✓	✓	7						101,102,128,129
Legacy Wagon (Canada)	'09-12	WAGON	✓	✓	✓	9	✓	✓	9	✓	✓	9	✓	✓	9						101,102,121,128
Legacy Wagon	'05-07	WAGON	✓	✓	✓	9	✓	✓	9	✓	✓	9	✓	✓	9						101,102,121,128
Legacy Wagon	'00-04	WAGON	✓	✓	✓	9	✓	✓	9	✓	✓	9	✓	✓	9						101,102,121,128
Outback 4DR	'05-07	SEDAN	✓	✓	✓	8	✓	✓	8	✓	✓	8	✓	✓	8						101,128,147
Outback 4DR	'00-04	SEDAN	✓	✓	✓	7	✓	✓	7	✓	✓	7	✓	✓	7						101,102,128,129
Outback Touring	'17-19	WAGON	✓	✓	✓	9	✓	✓	9	✓	✓	9	✓	✓	9						101,102,121,128
Outback Wagon	'15-19	WAGON	✓	✓	✓	9	✓	✓	9	✓	✓	9	✓	✓	9						101,102,121,128
Outback Wagon	'13-14	WAGON	✓	✓	✓	9	✓	✓	9	✓	✓	9	✓	✓	9						101,102,121,128
Outback Wagon	'10-12	WAGON	✓	✓	✓	9	✓	✓	9	✓	✓	9	✓	✓	9						101,102,121,128
Outback Wagon	'05-09	WAGON																			135
Outback Wagon	'00-04	WAGON	✓	✓	✓	9	✓	✓	9	✓	✓	9	✓	✓	9						101,102,121,128
Outback Sport Wagon	'02-11	WAGON	✓	✓	✓	8	✓	✓	8	✓	✓	8	✓	✓	8						101,102,121,127,128
Outback Sport Wagon	'00-01	WAGON	✓			9	✓		9	✓		9	✓		9						101,102,121,128
Tribeca	'06-14	SUV	✓	✓	✓	10	✓	✓	10	✓	✓	10	✓	✓	10						101,102,121,128
WRX/WRX STI 4DR (w/o Spoiler)	'18-19	SEDAN	✓	✓	✓	7	✓	✓	7	✓	✓	7	✓	✓	7						101,102,128
WRX/WRX STI 4DR (w/o Spoiler)	'15-17	SEDAN	✓	✓	✓	7	✓	✓	7	✓	✓	7	✓	✓	7						101,102,128
XV Crosstrek (w/o Spoiler)	'13-17	HATCH	✓	✓	✓	8	✓	✓	8	✓	✓	8	✓	✓	8						101,102,121,127,128

FIT TIPS

506-7250_01

NOTE: THULE STRAP RACKS HAVE BEEN DESIGNED TO FIT VEHICLES WITH STANDARD **FACTORY INSTALLED** SPOILERS, UNLESS OTHERWISE SPECIFIED.
PLEASE NOTE, THULE CANNOT BE RESPONSIBLE FOR FITS ON VEHICLES WITH AFTERMARKET SPOILERS.

THULE REAR MOUNTED RACK FIT INFORMATION

1 *What is my vehicle's make, model and year?*

2 *What do I need in order to put a Thule rack on the back of my vehicle?*

SUZUKI

		BODY TYPE	TRUNK													BED				SPARE	FIT TIPS
			9001/9001XT/9001PRO RACEWAY 2	9002/9002XT/9002PRO RACEWAY 3	9003/9003XT/9003PRO RACEWAY PLATFORM	FIT DIAL SETTING	9009 / 9009XT ARCHWAY 2	9010 / 9010XT ARCHWAY 3	FIT DIAL SETTING	9006 / 9006XT GATEWAY 2	9007 / 9007XT GATEWAY 3	FIT DIAL SETTING	910XT PASSAGE 2	911XT PASSAGE 3	FIT DIAL SETTING	501 INSTA-GATER	822XT BEDRIDER	823PRO GATE-MATE (MEDIUM)	824PRO GATE-MATE (LARGE)	963PRO SPARE ME PRO	Read the appropriate numbered tips on the last page before fitting vehicle.
Aerio 4DR	'02-07	SEDAN																			101,102,128
Aerio SX 5DR	'02-06	HATCH																			134
Esteem 4DR	'95-02	SEDAN	✓			6	✓		6	✓		6	✓		6						101,102,138
Esteem Wagon	'98-02	WAGON	✓			9	✓		9	✓		9	✓		9						101,102,121,128
Equator	'09-13	TRUCK														✓	✓	✓			
Forenza 4DR	'05-08	SEDAN																			135
Forenza Wagon	'05-08	WAGON	✓	✓	✓	8	✓	✓	8	✓	✓	8	✓	✓	8						101,102,128
Grand Vitara	'06-13	SUV																		✓	
Kizashi 4DR	'10-13	SEDAN	✓	✓	✓	7	✓	✓	7	✓	✓	7	✓	✓	7						101,102,128
Reno 5DR	'05-08	HATCH	✓	✓	✓	8	✓	✓	8	✓	✓	8	✓	✓	8						101,102,128
Swift 3DR	'95-01	HATCH	✓			8	✓		8	✓		8	✓		8						101,102
SX4 4DR	'07-13	SEDAN	✓	✓	✓	6	✓	✓	6	✓	✓	6	✓	✓	6						101,102,128
SX4 Sport 4DR	'07-13	SEDAN	✓	✓	✓	6	✓	✓	6	✓	✓	6	✓	✓	6						101,102,128
SX4 Sportback 5DR	'07-13	SPORTBACK	✓			9	✓		9	✓		9	✓		9						101,102,121,128
SX4 Hatchback	'07-13	HATCH	✓			9	✓		9	✓		9	✓		9						101,102,121,128
Verona 4DR	'04-07	SEDAN	✓	✓	✓	7	✓	✓	7	✓	✓	7	✓	✓	7						101,102,128
Vitara	'99-05	SUV																		✓	
XL-7	'07-09	SUV	✓	✓	✓	11	✓	✓	11	✓	✓	11	✓	✓	11					✓	101,112,121,128
XL-7	'01-06	SUV																		✓	

TESLA

Model 3	'18-19	SEDAN																			CHECK FOR UPDATE
Model S	'12-19	SEDAN																			134
Model X	'17-19	SUV																			NO FIT,134

TOYOTA

86 2DR	'17-19	COUPE	✓	✓	✓	6	✓	✓	6	✓	✓	6									101,102,128,155
4 Runner 4DR	'10-19	SUV	✓			10	✓	✓	10	✓	✓	10	✓	✓	10						101,102,121,128
4 Runner 4DR	'03-09	SUV	✓	✓	✓	10	✓	✓	10	✓	✓	10	✓	✓	10						101,102,121,127,128
4 Runner 4DR	'96-02	SUV	✓	✓	✓	10	✓	✓	10	✓	✓	10	✓	✓	10						101,102,121,127,128
Avalon 4DR	'19	SEDAN	✓			7	✓		7	✓		7	✓		7						101,102,113,128
Avalon 4DR	'13-18	SEDAN	✓			7	✓		7	✓		7	✓		7						101,102,128
Avalon 4DR	'05-12	SEDAN	✓			7	✓		7	✓		7	✓		7						101,102,116,128
Avalon 4DR	'00-04	SEDAN	✓	✓	✓	7	✓	✓	7	✓	✓	7	✓	✓	7						101,102,128
Camry 4DR	'18-19	SEDAN	✓			8	✓		8	✓		8	✓		8						101,102,128
Camry 4DR	'12-17	SEDAN	✓	✓	✓	7	✓	✓	7	✓	✓	7	✓	✓	7						101,102,128
Camry 4DR	'07-11	SEDAN	✓	✓	✓	7	✓	✓	7	✓	✓	7	✓	✓	7						101,102,128
Camry 4DR	'02-06	SEDAN	✓	✓	✓	7	✓	✓	7	✓	✓	7	✓	✓	7						101,102,128
Camry 4DR	'97-01	SEDAN	✓			6	✓		6	✓		6	✓		6						101,102,138
Celica 2DR	'00-05	COUPE																			135,136
Corolla 4DR	'14-19	SEDAN	✓	✓	✓	7	✓	✓	7	✓	✓	7	✓	✓	7						101,102,128,155
Corolla 4DR	'09-13	SEDAN	✓	✓	✓	7	✓	✓	7	✓	✓	7	✓	✓	7						101,102,128
Corolla 4DR	'03-08	SEDAN	✓	✓	✓	8	✓	✓	8	✓	✓	8	✓	✓	8						101,102,128
Corolla 4DR	'98-02	SEDAN	✓			7	✓		7	✓		7	✓		7						101,102,128
Corolla S 4DR	'14-19	SEDAN	✓	✓	✓	7	✓	✓	7	✓	✓	7	✓	✓	7						101,102,128,155
Corolla S 4DR	'09-13	SEDAN	✓	✓	✓	7	✓	✓	7	✓	✓	7	✓	✓	7						101,102,128
Corolla S 4DR	'03-08	SEDAN	✓	✓	✓	8	✓	✓	8	✓	✓	8	✓	✓	8						101,102,128
Corolla Hatchback 5DR	'19	HATCH																			CHECK FOR UPDATE
Corolla iM 5DR	'17-18	HATCH	✓	✓	✓	9	✓	✓	9	✓	✓	9	✓	✓	9						101,102,121,128

506-7250_01

NOTE: THULE STRAP RACKS HAVE BEEN DESIGNED TO FIT VEHICLES WITH STANDARD **FACTORY INSTALLED** SPOILERS, UNLESS OTHERWISE SPECIFIED.
PLEASE NOTE, THULE CANNOT BE RESPONSIBLE FOR FITS ON VEHICLES WITH AFTERMARKET SPOILERS.

THULE REAR MOUNTED RACK FIT INFORMATION

1 *What is my vehicle's make, model and year?*

2 *What do I need in order to put a Thule rack on the back of my vehicle?*

TOYOTA continued

		BODY TYPE	TRUNK													BED				SPARE	FIT TIPS
			9001/9001XT/9001PRO RACEWAY 2	9002/9002XT/9002PRO RACEWAY 3	9003/9003XT/9003PRO RACEWAY PLATFORM	FIT DIAL SETTING	9009 / 9009XT ARCHWAY 2	9010 / 9010XT ARCHWAY 3	FIT DIAL SETTING	9006 / 9006XT GATEWAY 2	9007 / 9007XT GATEWAY 3	FIT DIAL SETTING	910XT PASSAGE 2	911XT PASSAGE 3	FIT DIAL SETTING	501 INSTA-GATER	822XT BEDRIDER	823PRO GATE-MATE (MEDIUM)	824PRO GATE-MATE (LARGE)	963PRO SPARE ME PRO	Read the appropriate numbered tips on the last page before fitting vehicle.
C-HR	'18-19	SUV																			NO FIT,154
Echo 2DR	'00-06	COUPE																			135
Echo 4DR	'00-06	SEDAN																			135
FJ Cruiser	'07-14	SUV																		✓	150,152
Highlander	'14-19	SUV																			NO FIT, 154
Highlander	'08-13	SUV																			134
Highlander	'01-07	SUV	✓	✓	✓	10	✓	✓	10	✓	✓	10	✓	✓	10						101,102,121,127,128
Land Cruiser	'98-16	SUV	✓	✓	✓	11	✓	✓	11	✓	✓	11	✓	✓	11						101,102,121,128
Matrix	'09-14	HATCH	✓	✓	✓	9	✓	✓	9	✓	✓	9	✓	✓	9						101,102,121,128
Matrix	'03-08	HATCH	✓	✓	✓	9	✓	✓	9	✓	✓	9	✓	✓	9						101,102,121,128
Mirai	'16-19	HATCH																			CHECK FOR UPDATE
MR-2 Spyder	'00-05	CONVERTIBLE																			135
Prius 4DR	'01-03	SEDAN																			135
Prius 5DR	'16-19	HATCH																			NO FIT,134
Prius 5DR	'10-15	HATCH	✓	✓		7	✓	✓	7	✓	✓	7	✓	✓	7						101,102,121,138
Prius 5DR	'04-09	HATCH	✓	✓	✓	7	✓	✓	7	✓	✓	7	✓	✓	7						101,102,121,138
Prius C 5DR	'12-19	HATCH	✓			8	✓		8	✓		8	✓		8						101,102,121,128
Prius V 5DR Wagon	'12-18	WAGON	✓			9	✓		9	✓		9	✓		9						101,102,121,128
RAV 4	'19	SUV																			CHECK FOR UPDATE
RAV 4	'16-18	SUV																			NO FIT,133
RAV 4	'13-15	SUV	✓	✓		10	✓	✓	10	✓	✓	10	✓	✓	10						101,102,121,128
RAV 4	'07-12	SUV																		✓	150,152
RAV 4	'01-06	SUV																		✓	
RAV 4	'96-00	SUV																		✓	
Sequoia	'08-19	SUV	✓	✓	✓	9	✓	✓	9	✓	✓	9	✓	✓	9						101,102,121,127,138
Sequoia	'01-07	SUV	✓	✓	✓	9	✓	✓	9	✓	✓	9	✓	✓	9						101,102,121,127,138
Sienna	'11-19	VAN																			NO FIT,154
Sienna	'10	VAN	✓	✓	✓	11	✓	✓	11	✓	✓	11	✓	✓	11						101,102,121,128
Sienna	'04-09	VAN	✓	✓	✓	11	✓	✓	11	✓	✓	11	✓	✓	11						101,102,121,128
Sienna	'98-03	VAN	✓	✓	✓	10	✓	✓	10	✓	✓	10	✓	✓	10						101,102,121,128
Solara 2DR (AKA Camry Solara)	'04-08	COUPE	✓			7	✓		7	✓		7	✓		7						101,102,128
Solara 2DR (AKA Camry Solara)	'99-03	COUPE	✓			5	✓		5	✓		5	✓		5						101,102,128
Supra 2DR	'19	COUPE																			NO FIT
Tacoma	'16-19	TRUCK														✓		✓			148
Tacoma	'05-15	TRUCK														✓		✓			148
Tacoma	'96-04	TRUCK														✓		✓			148
Tundra	'14-19	TRUCK														✓			✓		148
Tundra	'07-13	TRUCK														✓			✓		148
Tundra	'99-06	TRUCK														✓	✓		✓		148
Venza	'09-15	SUV	✓			9	✓		9	✓		9	✓		9						101,102,121,138
Yaris 3DR	'12-19	HATCH	✓	✓	✓	10	✓	✓	10	✓	✓	10	✓	✓	10						101,102,121,128
Yaris 3DR	'07-11	HATCH	✓	✓	✓	10	✓	✓	10	✓	✓	10	✓	✓	10						101,102,121,128
Yaris iA 4DR	'17-19	SEDAN	✓			7	✓		7	✓		7	✓		7						101,102,128
Yaris 4DR	'07-12	SEDAN	✓	✓	✓	7	✓	✓	7	✓	✓	7	✓	✓	7						101,102,121,128
Yaris 5DR	'12-19	HATCH	✓	✓	✓	10	✓	✓	10	✓	✓	10	✓	✓	10						101,102,121,128
Yaris 5DR	'07-11	HATCH	✓	✓	✓	10	✓	✓	10	✓	✓	10	✓	✓	10						101,102,121,128

FIT TIPS

506-7250_01

NOTE: THULE STRAP RACKS HAVE BEEN DESIGNED TO FIT VEHICLES WITH STANDARD **FACTORY INSTALLED** SPOILERS, UNLESS OTHERWISE SPECIFIED.
PLEASE NOTE, THULE CANNOT BE RESPONSIBLE FOR FITS ON VEHICLES WITH AFTERMARKET SPOILERS.

THULE REAR MOUNTED RACK FIT INFORMATION

THULE SWEDEN

1 *What is my vehicle's make, model and year?*

2 *What do I need in order to put a Thule rack on the back of my vehicle?*

VOLKSWAGEN

			TRUNK													BED				SPARE	
		BODY TYPE	9001/9001XT/9001PRO RACEWAY 2	9002/9002XT/9002PRO RACEWAY 3	9003/9003XT/9003PRO RACEWAY PLATFORM	FIT DIAL SETTING	9009 / 9009XT ARCHWAY 2	9010 / 9010XT ARCHWAY 3	FIT DIAL SETTING	9006 / 9006XT GATEWAY 2	9007 / 9007XT GATEWAY 3	FIT DIAL SETTING	910XT PASSAGE 2	911XT PASSAGE 3	FIT DIAL SETTING	501 INSTA-GATER	822XT BEDRIDER	823PRO GATE-MATE (MEDIUM)	824PRO GATE-MATE (LARGE)	963PRO SPARE ME PRO	FIT TIPS Read the appropriate numbered tips on the last page before fitting vehicle.
Arteon 4DR	'19	SEDAN																			NO FIT, 137
Atlas	'18-19	SUV	✓	✓	✓	10	✓	✓	10	✓	✓	10	✓	✓	10						101,102,121,128
Amarok (Mexico)	'10-16	TRUCK														✓	✓		✓		148
Beetle	'12-19	COUPE	✓			6	✓	✓	6	✓	✓	6	✓	✓	6						101,102,128,155
Beetle	'98-10	COUPE	✓	✓	✓	7	✓	✓	7	✓	✓	7	✓	✓	7						101,102,128
Beetle Turbo	'12-19	COUPE	✓			5	✓	✓	5	✓	✓	5	✓	✓	5						101,102,128,155
Beetle Convertible	'03-10	CONVERTIBLE																			135
Eos	'07-16	CONVERTIBLE																			137
Eurovan (Excludes Campers)	'92-03	VAN																			133
GLI 4DR	'08-14	SEDAN	✓			7	✓		7	✓		7	✓		7						101,102,128
Golf 3DR (Type VII)	'15-19	HATCH	✓	✓		8	✓	✓	8	✓	✓	8	✓	✓	8						101,102,121,128
Golf 3DR (Type VII)	'15-19	HATCH			✓	9	✓	✓	8	✓	✓	8	✓	✓	8						101,102,121,128
Golf 3DR (Type VI)	'10-14	HATCH	✓	✓	✓	8	✓	✓	8	✓	✓	8	✓	✓	8						101,102,121,128
Golf 3DR (Type V)	'06-09	HATCH	✓	✓	✓	9	✓	✓	9	✓	✓	9	✓	✓	9						101,102,121,128
Golf 3DR (Type IV)	'99-05	HATCH	✓	✓	✓	8	✓	✓	8	✓	✓	8	✓	✓	8						101,102,121,128
Golf 5DR (Type VII)	'15-19	HATCH	✓	✓		8	✓	✓	8	✓	✓	8	✓	✓	8						101,102,121,128
Golf 5DR (Type VII)	'15-19	HATCH			✓	9	✓	✓	8	✓	✓	8	✓	✓	8						101,102,121,128
Golf 5DR (Type VI)	'10-14	HATCH	✓	✓	✓	8	✓	✓	8	✓	✓	8	✓	✓	8						101,102,121,128
Golf 5DR (Type V)	'06-09	HATCH	✓	✓	✓	9	✓	✓	9	✓	✓	9	✓	✓	9						101,102,121,128
Golf 5DR (Type IV)	'99-06	HATCH	✓	✓	✓	8	✓	✓	8	✓	✓	8	✓	✓	8						101,102,121,128
Golf Alltrack	'17-19	WAGON	✓	✓	✓	10	✓	✓	10	✓	✓	10	✓	✓	10						101,102,121,128
Golf City 5DR (Canada)	'08-10	HATCH	✓	✓	✓	8	✓	✓	8	✓	✓	8	✓	✓	8						101,102,121,128
Golf R 3DR	'15-19	HATCH	✓	✓		8	✓	✓	8	✓	✓	8	✓	✓	8						101,102,121,128
Golf R 3DR	'15-19	HATCH			✓	9	✓	✓	8	✓	✓	8	✓	✓	8						101,102,121,128
Golf R 3DR	'12-13	HATCH	✓	✓	✓	8	✓	✓	8	✓	✓	8	✓	✓	8						101,102,121,128
Golf R 5DR	'15-19	HATCH	✓	✓		8	✓	✓	8	✓	✓	8	✓	✓	8						101,102,121,128
Golf R 5DR	'15-19	HATCH			✓	9	✓	✓	8	✓	✓	8	✓	✓	8						101,102,121,128
Golf R 5DR	'12-13	HATCH	✓	✓	✓	8	✓	✓	8	✓	✓	8	✓	✓	8						101,102,121,128
Golf SportWagen	'15-19	WAGON	✓	✓	✓	10	✓	✓	10	✓	✓	10	✓	✓	10						101,102,121,128
Golf Wagon (Canada)	'10-14	WAGON	✓	✓	✓	10	✓	✓	10	✓	✓	10	✓	✓	10						101,102,121,128
GTI 3DR (Type VII)	'15-19	HATCH	✓	✓		8	✓	✓	8	✓	✓	8	✓	✓	8						101,102,121,128
GTI 3DR (Type VII)	'15-19	HATCH			✓	9	✓	✓	8	✓	✓	8	✓	✓	8						101,102,121,128
GTI 3DR (Type VI)	'10-14	HATCH	✓	✓	✓	8	✓	✓	8	✓	✓	8	✓	✓	8						101,102,121,128
GTI 3DR (Type V)	'06-09	HATCH	✓	✓	✓	8	✓	✓	8	✓	✓	8	✓	✓	8						101,102,121,128
GTI 3DR (Type IV)	'99-06	HATCH	✓	✓	✓	8	✓	✓	8	✓	✓	8	✓	✓	8						101,102,121,128
GTI 5DR (Type VII)	'15-19	HATCH	✓	✓		8	✓	✓	8	✓	✓	8	✓	✓	8						101,102,121,128
GTI 5DR (Type VII)	'15-19	HATCH			✓	9	✓	✓	8	✓	✓	8	✓	✓	8						101,102,121,128
GTI 5DR (Type VI)	'10-14	HATCH	✓	✓	✓	8	✓	✓	8	✓	✓	8	✓	✓	8						101,102,121,128
GTI 5DR (Type V)	'06-09	HATCH	✓	✓	✓	8	✓	✓	8	✓	✓	8	✓	✓	8						101,102,121,128
Jetta 4DR (Type VII)	'19	SEDAN	✓			7	✓		7	✓		7	✓		7						101,102,113,128
Jetta 4DR (Type VI)	'11-18	SEDAN	✓			7	✓		7	✓		7	✓		7						101,102,128
Jetta 4DR (Type V)	'06-10	SEDAN	✓			7	✓		7	✓		7	✓		7						101,102,128
Jetta 4DR (Type IV)	'99-05	SEDAN	✓	✓	✓	7	✓	✓	7	✓	✓	7	✓	✓	7						101,102,128
Jetta SportWagen / Clean Diesel TDI	'09-14	WAGON	✓	✓	✓	10	✓	✓	10	✓	✓	10	✓	✓	10						101,102,121,128
Jetta Wagon	'01-08	WAGON	✓	✓	✓	10	✓	✓	10	✓	✓	10	✓	✓	10						101,102,121,128
Passat 4DR	'12-19	SEDAN	✓	✓	✓	7	✓	✓	7	✓	✓	7	✓	✓	7						101,102,128
Passat 4DR	'06-10	SEDAN	✓	✓	✓	7	✓	✓	7	✓	✓	7	✓	✓	7						101,102,128
Passat 4DR	'98-05	SEDAN	✓	✓	✓	7	✓	✓	7	✓	✓	7	✓	✓	7						101,102,128

506-7250_01

NOTE: THULE STRAP RACKS HAVE BEEN DESIGNED TO FIT VEHICLES WITH STANDARD **FACTORY INSTALLED** SPOILERS, UNLESS OTHERWISE SPECIFIED.
PLEASE NOTE, THULE CANNOT BE RESPONSIBLE FOR FITS ON VEHICLES WITH AFTERMARKET SPOILERS.

THULE REAR MOUNTED RACK FIT INFORMATION

1 *What is my vehicle's make, model and year?*

2 *What do I need in order to put a Thule rack on the back of my vehicle?*

VOLKSWAGEN continued

		BODY TYPE	TRUNK													BED				SPARE	FIT TIPS
			9001/9001XT/9001PRO RACEWAY 2	9002/9002XT/9002PRO RACEWAY 3	9003/9003XT/9003PRO RACEWAY PLATFORM	FIT DIAL SETTING	9009 / 9009XT ARCHWAY 2	9010 / 9010XT ARCHWAY 3	FIT DIAL SETTING	9006 / 9006XT GATEWAY 2	9007 / 9007XT GATEWAY 3	FIT DIAL SETTING	910XT PASSAGE 2	911XT PASSAGE 3	FIT DIAL SETTING	501 INSTA-GATER	822XT BEDRIDER	823PRO GATE-MATE (MEDIUM)	824PRO GATE-MATE (LARGE)	963PRO SPARE ME PRO	Read the appropriate numbered tips on the last page before fitting vehicle.
Passat CC	'09-17	COUPE																			NO FIT,137
Passat Wagon	'90-10	WAGON	✓	✓	✓	10	✓	✓	10	✓	✓	10	✓	✓	10						101,102,121,128
Phaeton 4DR	'04-06	SEDAN	✓	✓	✓	7	✓	✓	7	✓	✓	7	✓	✓	7						101,112,128
Rabbit 3DR	'06-09	HATCH	✓	✓	✓	9	✓	✓	9	✓	✓	9	✓	✓	9						101,102,121,128
Rabbit 5DR	'06-09	HATCH	✓	✓	✓	9	✓	✓	9	✓	✓	9	✓	✓	9						101,102,121,128
Routan	'11-14	VAN	✓	✓	✓	11	✓	✓	11	✓	✓	11	✓	✓	11						101,102,121,128
Routan	'09-10	VAN	✓	✓	✓	11	✓	✓	11	✓	✓	11	✓	✓	11						101,102,121,128
Tiguan	'18-19	SUV	✓	✓	✓	10	✓	✓	10	✓	✓	10	✓	✓	10						101,102,121,128
Tiguan	'12-17	SUV																			137
Tiguan	'08-11	SUV																			137
Touareg	'08-17	SUV	✓	✓	✓	10	✓	✓	10	✓	✓	10	✓	✓	10						101,102,121,128
Touareg	'04-07	SUV	✓	✓	✓	10	✓	✓	10	✓	✓	10	✓	✓	10						101,102,121,128

VOLVO

C30 3DR	'08-13	HATCH																			137
C70 Convertible	'06-13	CONVERTIBLE																			137
C70 Convertible	'98-05	CONVERTIBLE	✓	✓	✓	6	✓	✓	6	✓	✓	6	✓	✓	6						101,110,128,156
S40 4DR	'05-11	SEDAN	✓	✓	✓	7	✓	✓	7	✓	✓	7	✓	✓	7						101,102,128
S40 4DR	'00-04	SEDAN	✓	✓	✓	7	✓	✓	7	✓	✓	7	✓	✓	7						101,108,128
S60 4DR	'19	SEDAN																			CHECK FOR UPDATE
S60 4DR	'10-18	SEDAN	✓	✓	✓	7	✓	✓	7	✓	✓	7	✓	✓	7						101,102,128
S60 4DR	'01-09	SEDAN	✓	✓	✓	7	✓	✓	7	✓	✓	7	✓	✓	7						101,102,128
S70 4DR	'98-00	SEDAN	✓			6	✓		6	✓		6	✓		6						101,102,138
S80 4DR	'07-16	SEDAN	✓	✓	✓	7	✓	✓	7	✓	✓	7	✓	✓	7						101,102,128
S80 4DR	'99-06	SEDAN	✓	✓	✓	7	✓	✓	7	✓	✓	7	✓	✓	7						101,102,128
S90 4DR	'17-19	SEDAN																			NO FIT,135
S90 4DR	'98-00	SEDAN	✓			6	✓		6	✓		6	✓		6						101,102,138
V40	'00-04	WAGON	✓	✓	✓	11	✓	✓	8	✓	✓	8	✓	✓	8						101,102,121,128
V50	'05-11	WAGON	✓	✓	✓	10	✓	✓	10	✓	✓	10	✓	✓	10						101,102,121,128
V60	'19	WAGON																			CHECK FOR UPDATE
V60	'14-18	WAGON																			NO FIT,154
V70	'98-10	WAGON	✓	✓	✓	10	✓	✓	10	✓	✓	10	✓	✓	10						101,102,121,128
V70 XC	'01-10	WAGON	✓	✓	✓	10	✓	✓	10	✓	✓	10	✓	✓	10						101,102,121,128
V90	'17-19	WAGON																			NO FIT,154
V90	'98-00	WAGON	✓	✓	✓	10	✓	✓	10	✓	✓	10	✓	✓	10						101,102,121,128
XC40	'18-19	SUV																			CHECK FOR UPDATE
XC60	'18-19	SUV																			NO FIT,157
XC60	'09-17	SUV																			NO FIT,157
XC70	'01-16	WAGON	✓	✓	✓	10	✓	✓	10	✓	✓	10	✓	✓	10						101,102,121,128
XC90	'16-19	SUV																			NO FIT,137
XC90	'03-15	SUV	✓	✓	✓	9	✓	✓	9	✓	✓	9	✓	✓	9						101,102,121,128

506-7250_01

NOTE: THULE STRAP RACKS HAVE BEEN DESIGNED TO FIT VEHICLES WITH STANDARD **FACTORY INSTALLED** SPOILERS, UNLESS OTHERWISE SPECIFIED.
PLEASE NOTE, THULE CANNOT BE RESPONSIBLE FOR FITS ON VEHICLES WITH AFTERMARKET SPOILERS.

THULE REAR MOUNTED RACK FIT TIPS

101 Place top clips in the gap at the front edge of the top of the trunk, hatch or door.

102 Place lower clips in the bottom edge of trunk or hatch.

103 Set lower clips/hooks into vehicle's left and right tow loops under the rear of the vehicle.

104 Set lower clips/hooks into tow loop on the right and frame hole on the left.

105 Set lower clips into bottom edge of internal metal bumper.

106 Set lower clips/hooks into frame holes.

107 Set lower clips into bottom edge of rear doors.

108 Set lower clips into frame holes in back of bumper.

109 Set lower clips onto bottom edge of bumper.

110 Set lower clip/hook onto edge of structural bumper located behind plastic bumper.

111 Frame holes are located up high on the backside of bumper.

112 Set lower clip/hooks into frame holes in chassis behind bumper.

113 Place side clips above outer edge of rear lights.

114 Chafe guards required.

116 Bumper cover may deform with the use of this carrier. Remove carrier when not in use.

117 The upper arm of carrier, between rubber pads, may contact the center ridge in the trunk lid when carrier is fully mounted.

118 Lower arm of the carrier will mount against the license plate and the lights to the left and right of it.

119 Lower arm of the carrier will mount on the ridge on the bottom of the rear door, just above the bottom edge of the rear door.

121 Caution: Rear wiper cannot be used when carrier is mounted.

123 Lower arm of the carrier will mount higher on the rear door, so that the upper arm rests against the metal above the rear window.

124 Rear wiper must be positioned through the upper arm of carrier.

125 Always check to make sure there is no contact between the lower straps and the muffler and/or exhaust pipe.

126 Caution: The trunk lid may deform slightly with the use of this carrier. Remove carrier when not in use.

127 If present, route top strap under the spoiler on top of the hatch.

128 Lower arm of carrier should be positioned on upper tier of bumper.

129 Rubber weather stripping at top door/hatch will deform over time. Remove carrier when not in use.

130 Set lower clips/hooks into frame holes in bumper located by the right and left bumper strut.

131 Set lower clips/hooks into tow loop on the right and edge of bumper, by the bumper strut, on the left.

132 Lower arm of carrier will sit on trunk ridge.

133 Carrier is not recommended because lower straps can not be mounted in a safe place.

134 Carrier is not recommended because top straps should not be mounted directly to glass or plastic trim covering glass.

135 Carrier is not recommended because vehicle is unable to support carrier weight.

136 Carrier is not recommended because upper arm of carrier could damage trunk lid.

137 Carrier is not recommended because top straps can not be mounted in a safe place.

138 Lower arm of carrier will rest in the bottom of the license plate well.

139 Lower arm of carrier will rest above license plate well.

140 Lower arm of carrier will rest at bottom of trunk lip.

141 Lower arm of carrier will rest in the area between the license plate well and upper tier of the bumper.

142 Set lower clips/hooks on top edge of the metal bumper struts.

144 Vehicle can have an externally mounted spare tire prohibiting the use of any strap rack.

145 Set lower clips/hooks into tow loop on the left and frame hole on the right.

146 Carrier is not recommended because it cannot be installed without unwanted contact.

147 Set lower clips/hooks in tow loop located in the center of the vehicle behind the bumper.

148 Please verify vehicle cargo area will accept bicycle wheelbase prior to purchase.

150 The original 963 Spare Me will not fit on this vehicle. Only the 963XT / 963XTR / 963PRO will fit.

151 If this vehicle has a spoiler installed, it is a "NO FIT"

152 If this vehicle has a spare tire mounted back-up camera, the 963 / 963XT / 963PRO will not fit.

153 Truck bed is not long enough to carry bikes using the 501 Insta-Gater.

154 All instances of this vehicle come with a factory spoiler which is not strong enough to take the weight of our strap carriers.

155 For carriers with side straps and clips: Place side clips in the bottom edge of trunk or hatch next to the lower clips.

156 Do not operate convertible roof while rack is in place.

157 The factory installed spoiler will not allow proper installation, this vehicle cannot be fitted with a strap rack.

158 On models equipped with a factory spoiler, ensure that the hooks attach to the metal body of the vehicle and not the plastic spoiler.

506-7250_01