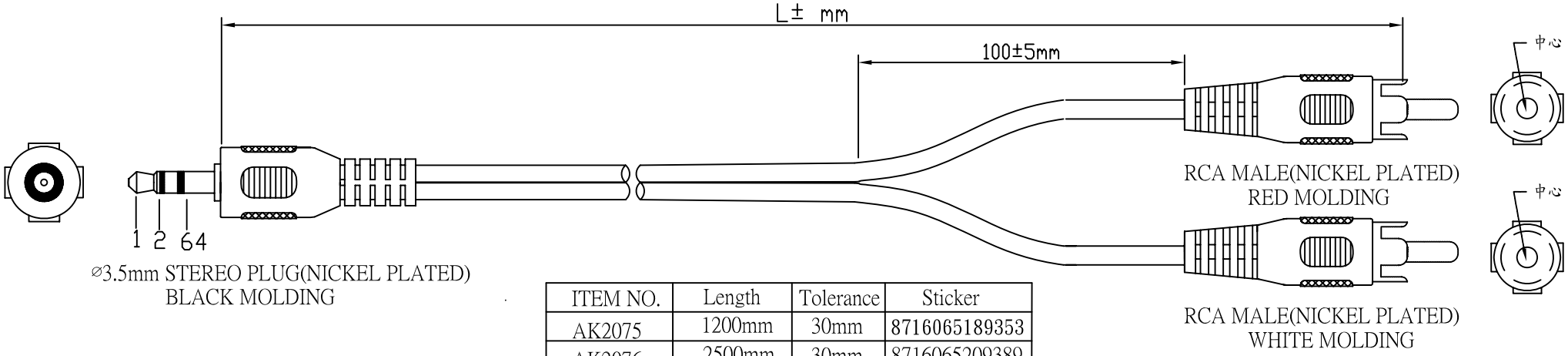

ITEM NO.	Length	Tolerance	Sticker
AK2075	1200mm	30mm	8716065189353
AK2076	2500mm	30mm	8716065209389
AK2077	5000mm	30mm	8716065209396
AK2078	10000mm	100mm	8716065209402
AK2079	15000mm	100mm	8716065209419

NOTE:

1. CABLE:28AWG,NON-UL,(1C+S)*2,BLACK COLOR,OD=2.8*5.6mm,PVC JACKET.
2. LENGTH:L
3. CONNECTOR: 3.5mm STEREO PLUG*1PCS, RCA MALE*2PCS(BROWN INSULATOR).(NICKEL PLATED)
4. MOLD: 3.5-RCA MOLD
5. CONTACTS:

3.5(BLACK)	1	2	64
RCA(RED)	1		64
RCA(WHITE)		1	64
	CENTER	CENTER	SHIELD

6. OPEN/SHORT TEST: 100% TEST.
   INSULATION: 5M.

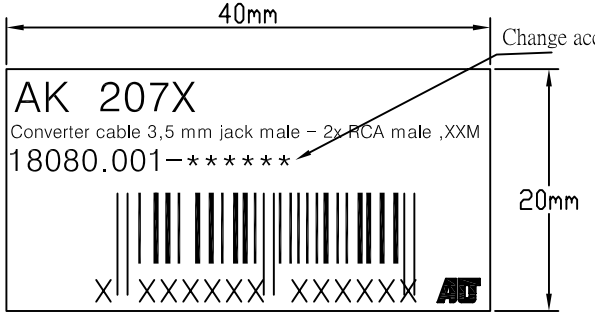

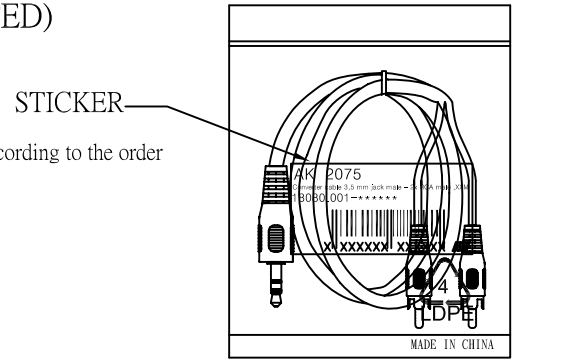

1PCS/PEBAG+STICKER+5PCS/PE BAG

RoHS Compliant

Company	IBV	Goods Code		Draw	FC001 WJF	Date	2010.02.26		D		
ITEM NO.	AK207X	Drawing Evidence:		Check		Date			C	Revised. AK207X series drawing	10.08.05 WJF
Goods NO.									B	Adding packaging info.	10.03.12 WJF
Original NO.	S-*******	Unit(mm)		Approval		Date			VER. A	REVISE	Date