Mounting Rail Brush Strips for 750 mm Wide NetShelter™ SX Cabinets

AR7706

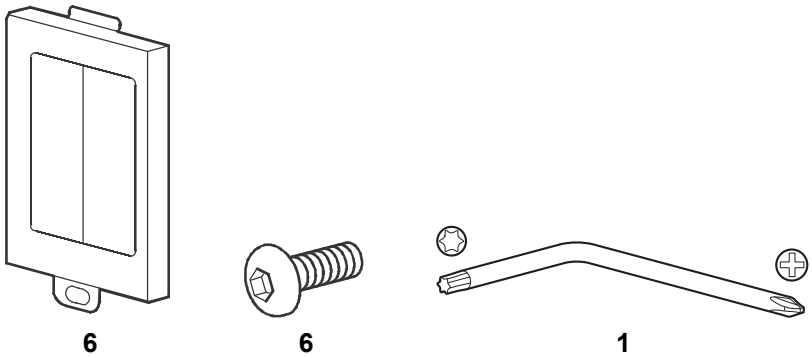

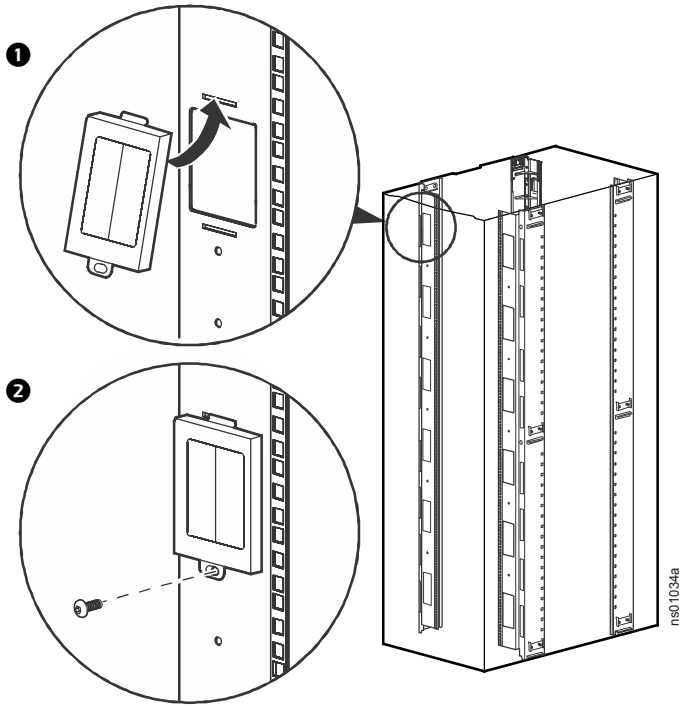

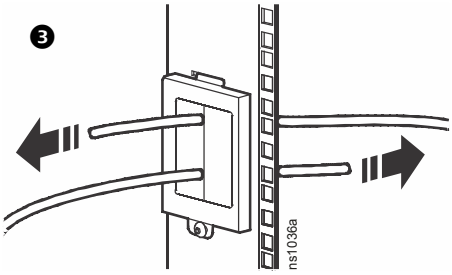

Customer support and warranty information is available at **www.schneider-electric.com**.

© 2016 Schneider Electric. All Rights Reserved. NetShelter is a trademark owned by Schneider Electric, S.A.S.

990-2453A
5/2016