1 Kit 186035

OPEL/VAUXHALL/HOLDEN Astra, 5-dr Estate, 07-10
OPEL/VAUXHALL/HOLDEN Zafira, 5-dr MPV, 07-11
OPEL/VAUXHALL/HOLDEN Zafira Family, 5-dr MPV, 11-14

ISO 11154-E

This kit is only for vehicles with flush railing.

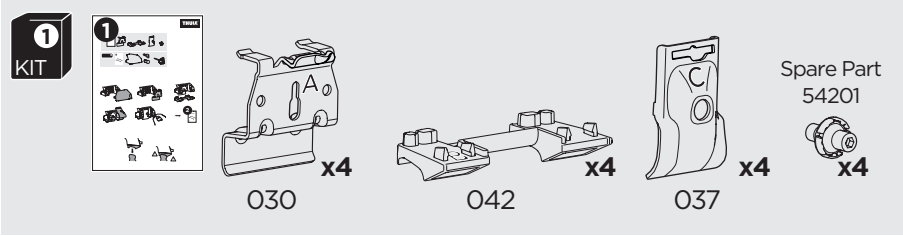

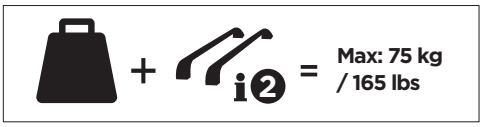

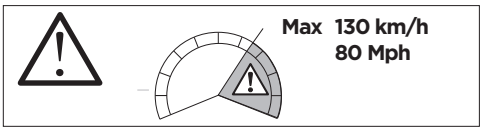

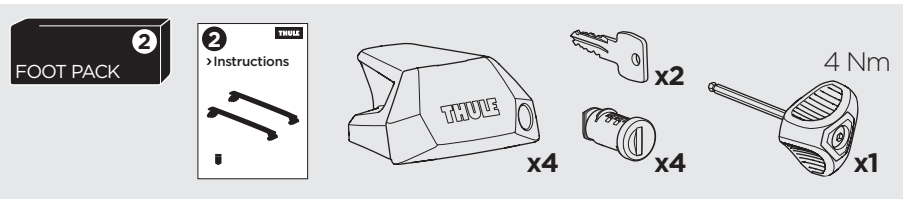

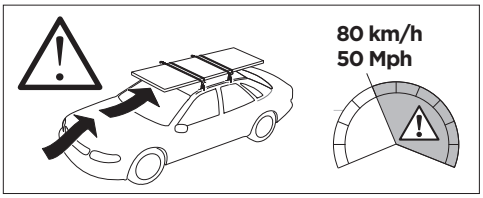

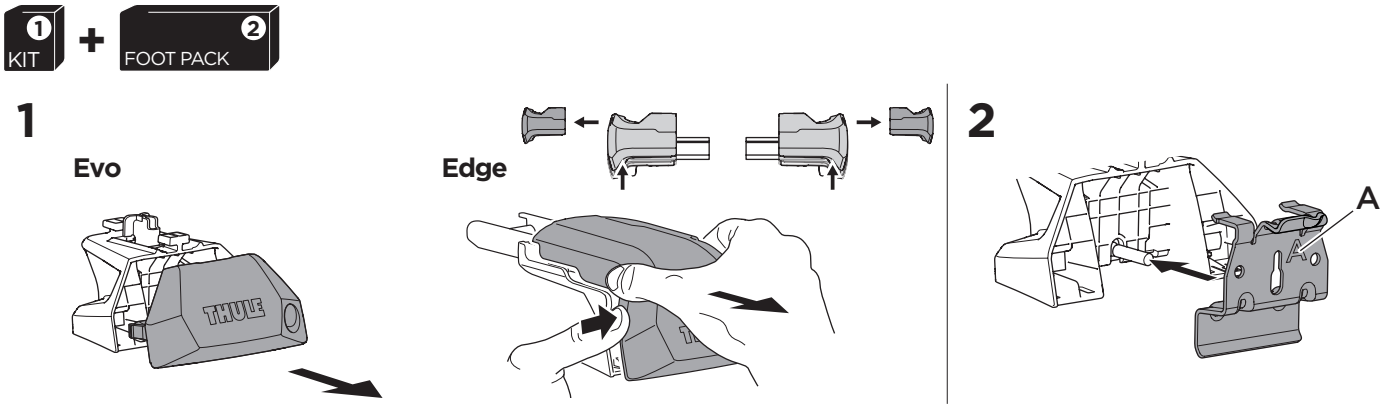

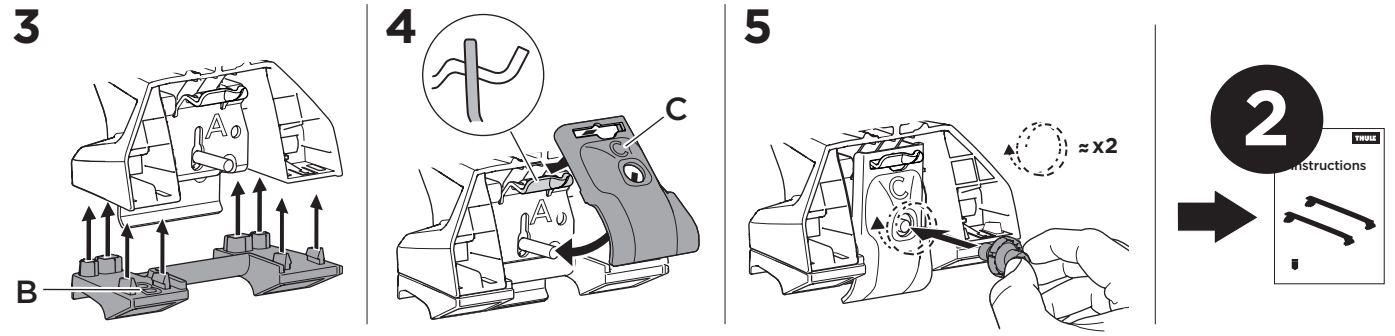

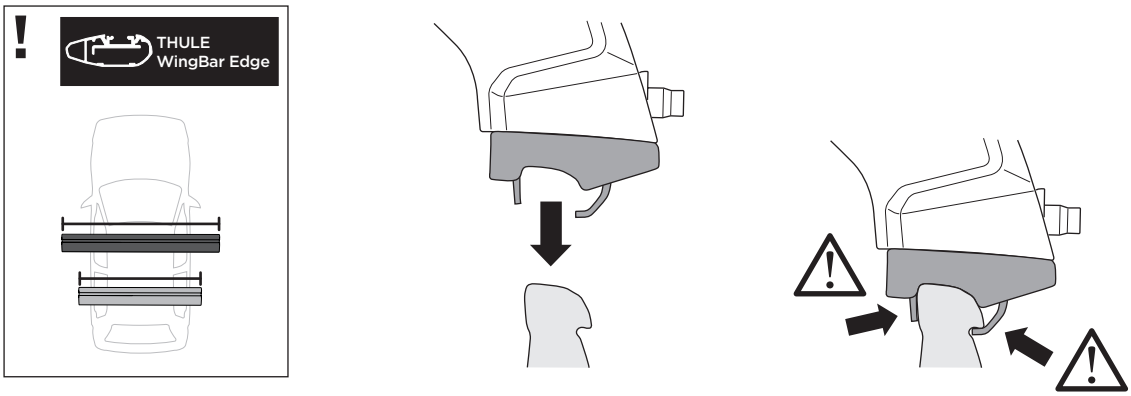

Thule Sweden AB, Borggatan 5
335 73 Hillerstorp, SWEDEN
PART OF THULE GROUP

info@thule.com

www.thule.com

© Thule Group 2019. All rights reserved.

522-6035-02